ZÜNDAPP SERVICE

SPARE PARTS LIST

ZÜNDAPP-SCOOTER

R 154 BELLA

with Kickstarter

Published in June 1957

www.zundappveteranenclub.nl

ZÜNDAPP SERVICE

SPARE PARTS LIST

ZÜNDAPP-SCOOTER

R 154 BELLA

with Kickstarter

Published in June 1957

Printed in Germany

www.zundappveteranenclub.nl

Contents

		Page	Illustration
Introduction		5	—
Group M:	a) Engine (assembly)	7	1
	b) Housing and cylinder		
	Crankcase	9	2
	Crankcase cover	13	3
	Cylinder and cylinder head	15	4
	c) Drive mechanism		
	Crankshaft, connecting rod, piston	17	5
	f) Carburettor	19	6
	Intake silencer and air cleaner	23	7
	g) Clutch, clutch operating mechanism	25	8
Group G:	c) Shafts and gears		
	Selector shaft	27	9
	Starter shaft	31	10
	d) Footshift mechanism	33	11
Group R:	a) Frame	37	12
	Front engine carrier, side stand	39	13
	Rear engine carrier with swinging fork	41	14
	b) Foot boards	45	15
	d) Mudguards		
	Front mudguard	47	16
	Rear mudguard and chaincase	49	17
	e) Body		
	Front shield	53	18
	Front cover and dashboard with cover	55	19
	Rear body	57	20
	Dual seat	59	21
	f) Fuel tank and fuel pipes	61	22
	h) Exhaust set	63	23
	i) Front swinging arm suspension	65	24
	k) Handlebar and handlevers with cables	69	25
Group B:	a) Brakes		
	Handbrake	73	26
	Footbrake	75	27
	b) Wheels	79	28
Group E:	a) Electrical equipment		
	Headlight, battery, dashboard, taillight, horn, conducts	81	29
	Starter generator	87	30
Group W:	a) Tools	89	31
	b) Toolbox	91	32

www.zundappveteranenclub.nl

www.zundappveteranenclub.nl

INTRODUCTION

Please take note that only **Genuine Zündapp Spares** will be the safeguard for security, claims under guarantee, and will prevent many a damage and loss.

Therefore, do not use parts of another origin but demand only **Genuine Zündapp Spares** from your Zündapp dealer, for by fitting imitated parts any claim under guarantee will automatically become void.

In order to avoid errors, queries, and incorrect deliveries, please quote with all orders for spare parts:

1. **Description and number of the spare part wanted**
   in accordance with this list,
2. **Frame number**
   stamped into the rating plate,
3. **Modifications made on the vehicle**
   by exchanging spare parts or groups.

If these data cannot be given it will be necessary to send in a pattern labelled with the sender's name and address. These patterns will be returned to the sender only upon request.

Model Order

Re. Frame No. R 29 367

1 crankshaft	No. 1950 k 202
1 cylinder	No. 2162 z 210
1 piston	No. 883 z 152
2 piston rings	No. 1262 z 101

Deliveries of spare parts are only made through our respective representatives.

All illustrations and data in this list are not binding. We reserve the right for alterations without previous notice.

ZÜNDAPP-WERKE G.M.B.H., NÜRNBERG-MÜNCHEN
NÜRNBERG WORKS

Illustration 1, Group M: a) Engine (Assembly)

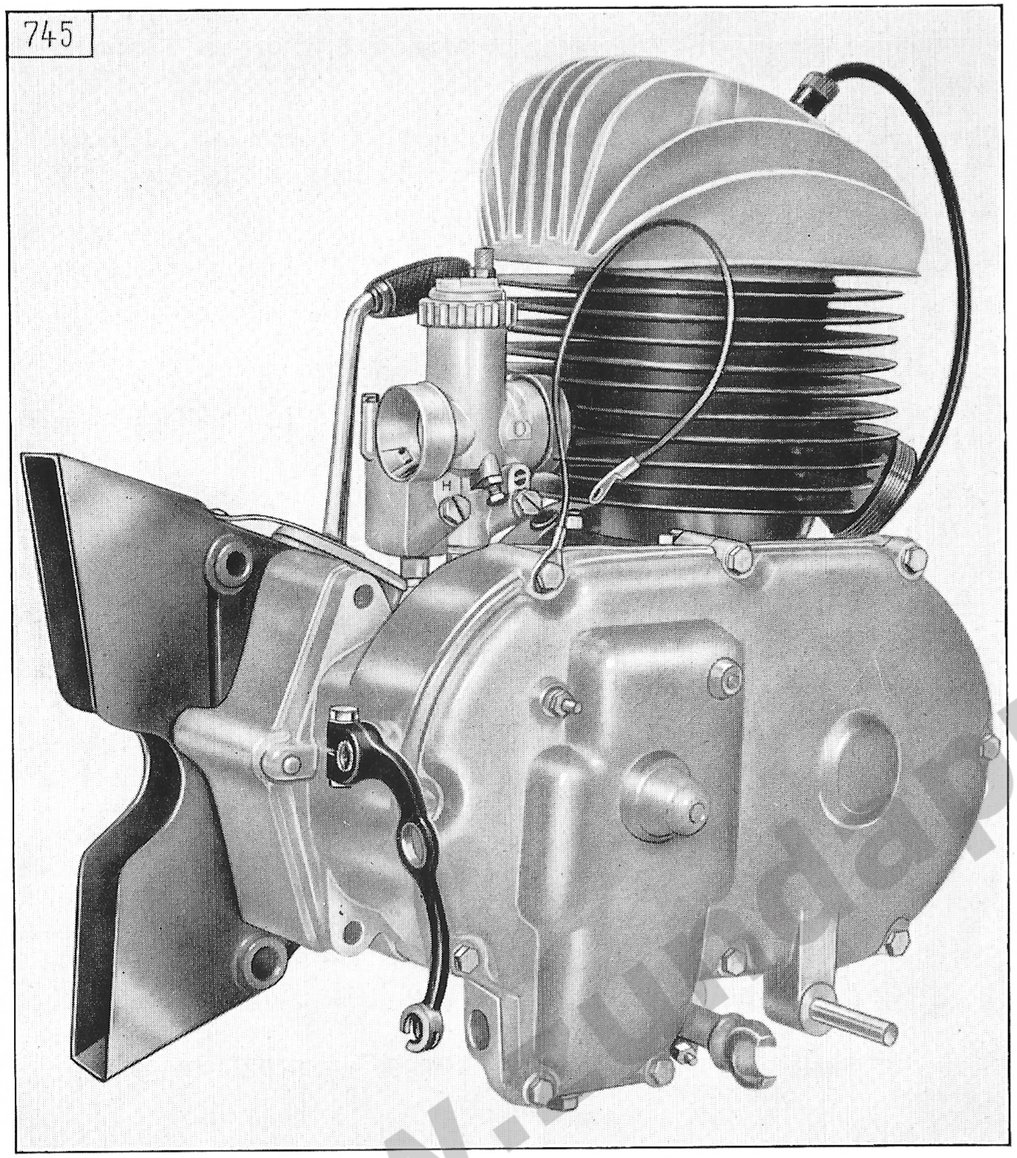

Illustration 1, Group M: a) Engine (Assembly)

Key No.	Spare Part No.	Description	No. of Pieces	Remarks
		Engine		
—	6590 k 250	Engine complete with generator and carburettor	1	

www.vpvdappveteranenclub.nl

Illustration 2, Group M: b) Housing and Cylinder, Crankcase

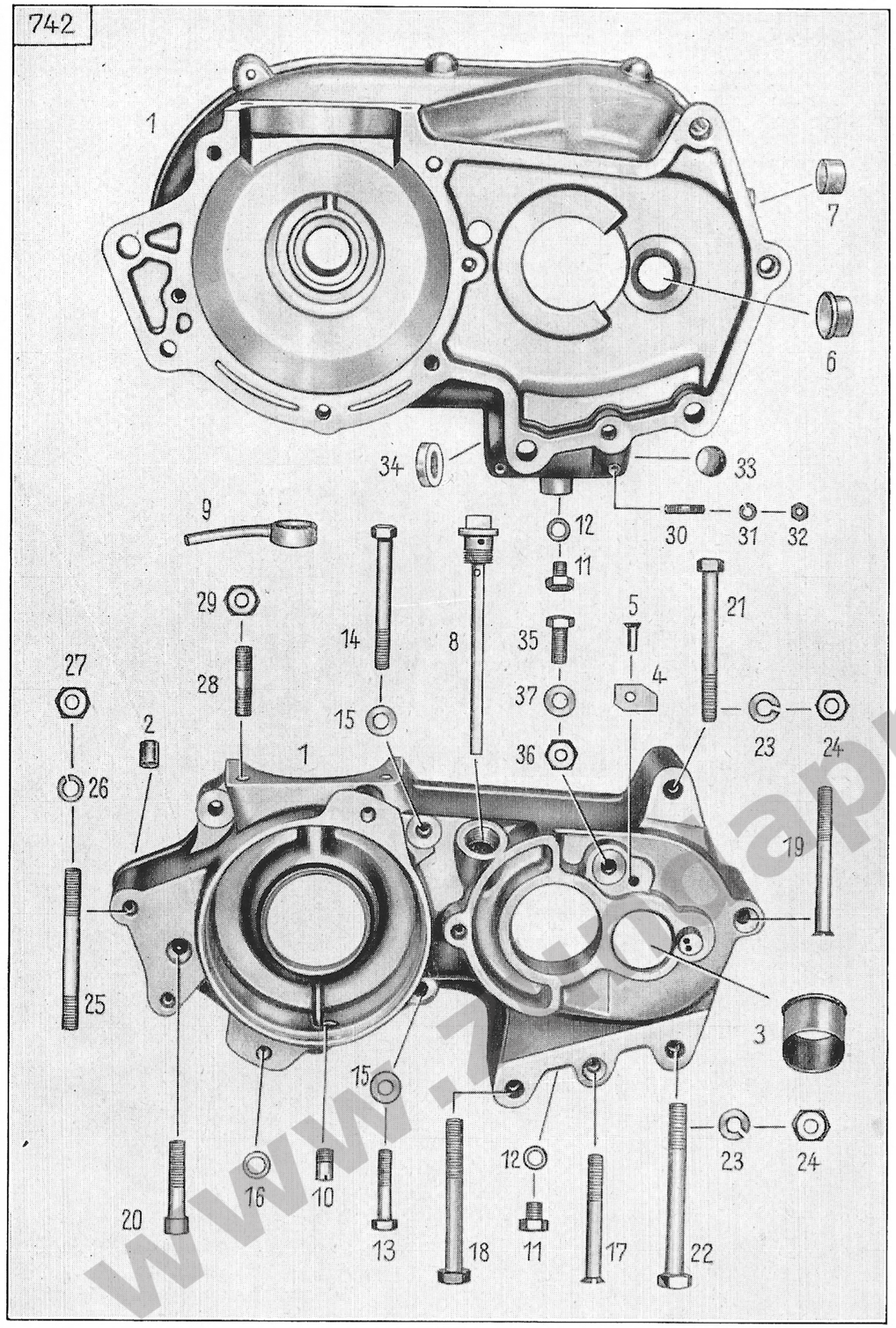

Illustration 2, Group M: b) Housing and Cylinder, Crankcase

Key No.	Spare Part No.	Description	No. of Pieces	Remarks
		Crankcase		
1	510 k 227	crankcase complete	1	
2	181 z 18	bushing (between left and right half of crankcase)	2	
3	184 z 501	bushing (for starter shaft)	1	
4	1141 z 2151	stop (to engaging pin)	1	
5	1041 z 101	rivet	1	
6	184 z 318	bearing bushing (for starter shaft)	1	
7	184 z 328	bearing bushing (for clutch pressure bar)	1	
8	1550 z 115	oil dip stick (for gearbox)	1	
9	1340 z 230	breather tube (on oil dip stick) ..	1	
10	1331 z 839	gas escape pipe (in crankcase) ..	1	
11	—	hex. screw M 8 × 10 DIN 933 (for oil draining)	2	
12	—	packing washer C 8 × 14 DIN 7603	2	
13	—	hex. screw M 8 × 35 DIN 931 k (to fasten left to right half of crankcase)	3	
14	—	hex. screw M 8 × 70 DIN 931 k (to fasten left to right half of crankcase)	1	
—	—	hex. screw M 8 × 85 DIN 931 k (to fasten left to right half of crankcase)	1	
15	—	spring washer B 8 DIN 137 k	4	
16	1303 z 02	shim	1	
17	—	screw, countersunk raised head M 8 × 65 DIN 91 k (to fasten left to right half of crankcase)	1	
18	—	hex. screw M 10 × 80 DIN 931 k (to fasten left to right half of crankcase)	1	
—	—	spring washer B 10 DIN 137	1	
—	—	hex. nut M 10 DIN 934 k	1	

www.zzdappveteranendub.nl

www.zundappveteranenclub.nl

Illustration 2, Group M: b) Housing and Cylinder, Crankcase

Key No.	Spare Part No.	Description	No. of Pieces	Remarks
19	—	screw, countersunk M 8 × 80 DIN 63 k (to fasten left to right half of crankcase)	1	
20	—	cylindrical screw M 8 × 40 DIN 912 k (to fasten left to right half of crankcase)	1	
21	—	hex. screw M 10 × 80 DIN 931 k (to fasten crankcase to rear engine carrier)	1	
22	—	hex. screw M 10 × 90 DIN 931 k (to fasten crankcase to rear engine carrier)	1	
23	—	spring washer A 10 DIN 127 k	2	
24	—	hex. nut M 10 DIN 934 k	2	
25	—	stud M 8 × 65 DIN 940 k (to fasten crankcase to front engine suspending plates)	2	
26	—	spring washer A 8 DIN 127 k	4	
27	—	hex. nut M 8 DIN 934 k	4	
28	1561 z 010	stud (for fixing cylinder)	4	
29	—	hex. nut M 8 DIN 934 k	4	
30	1561 z 107	stud (for fixing gear selector support)	4	
31	—	spring washer A 5 DIN 127 k	4	
32	—	hex. nut M 5 DIN 934 k	4	
33	—	sealing washer 16 DIN 470 (pertaining to right half of crankcase) ..	1	
34	—	radial gasket (oil seal) B 14 × 24 × 7 DIN 6503 (pertaining to footshift shaft)	1	
35	—	hex. screw M 8 × 1 × 20 DIN 960 ..	1	
36	—	hex. nut M 8 × 1 DIN 936	1	
37	—	spring washer B 8 DIN 137	1	

Illustration 3, Group M: b) Housing and Cylinder, Crankcase Cover

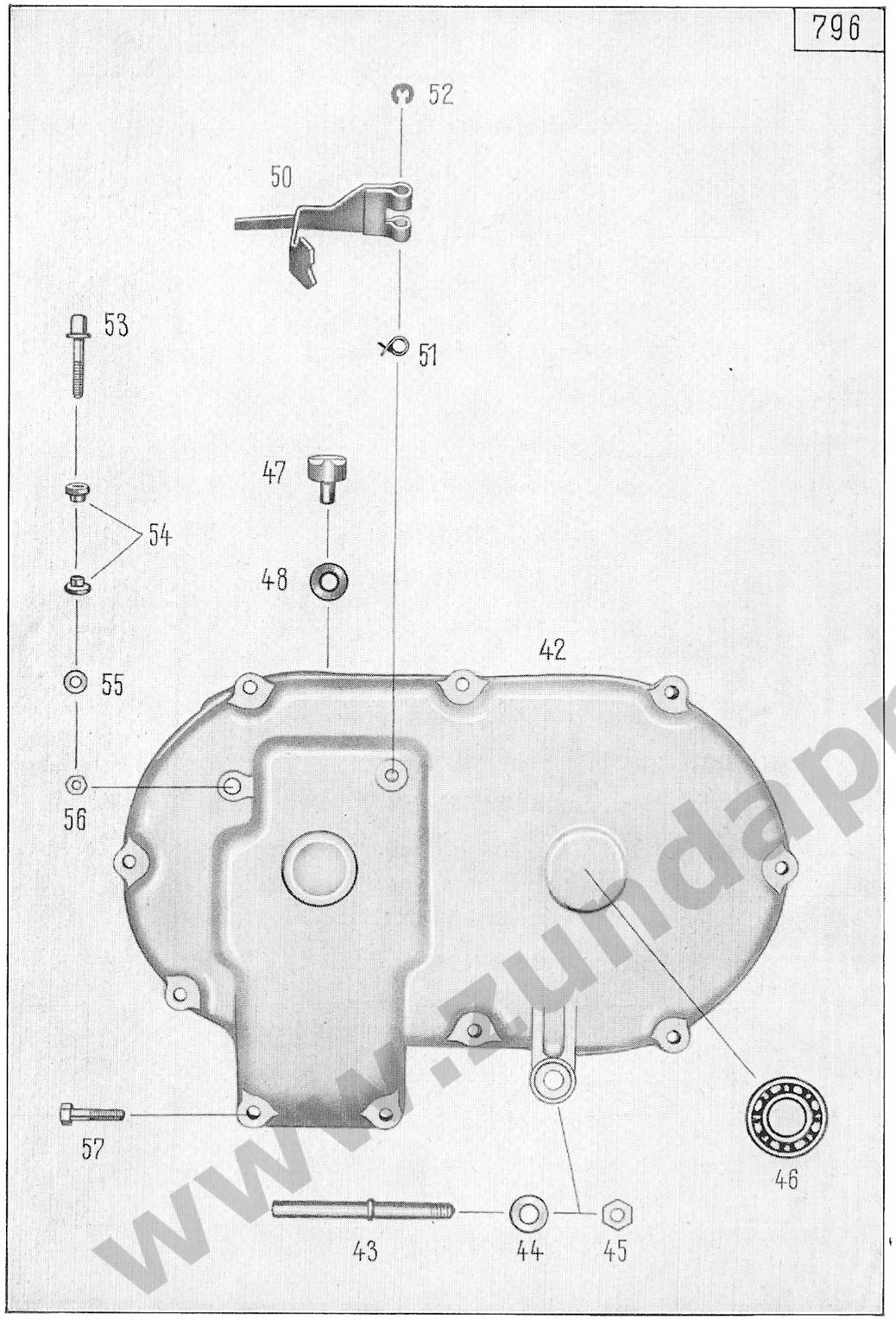

Illustration 3, Group M: b) Housing and Cylinder, Crankcase Cover

Key No.	Spare Part No.	Description	No. of Pieces	Remarks
		Crankcase Cover		
42	263 z 211	crankcase cover	1	
43	121 z 1122	bolt (to bell crank)	1	
44	—	spring washer A 8 DIN 137 k	1	
45	—	hex. nut M 8 DIN 934 k	1	
46	—	ball bearing 6203 DIN 625	1	
47	1127 z 6	supporting bolt	1	
48	1301 z 52	compensating shim } for supporting bolt	as required	
—	1301 z 616	compensating shim } for supporting bolt	as required	
50	670 z 205	contact lever (for idle check light)	1	
51	321 z 322	ratchet spring	1	
52	—	C-washer 3,2 DIN 6799	1	
53	131 z 515	bolt	1	
—	1806 z 01	connexion protector	1	
54	176 z 29	bushing	2	
55	—	washer 5,3 DIN 125 k	1	
56	—	hex. nut M 5 DIN 934 k	1	
57	—	hex. screw M 6 × 22 DIN 931 k (to fasten crankcase cover to crankcase)	10	

www.zundappveteranenclub.nl

Illustration 4, Group M: b) Housing and Cylinder, Cylinder and Cylinder Head

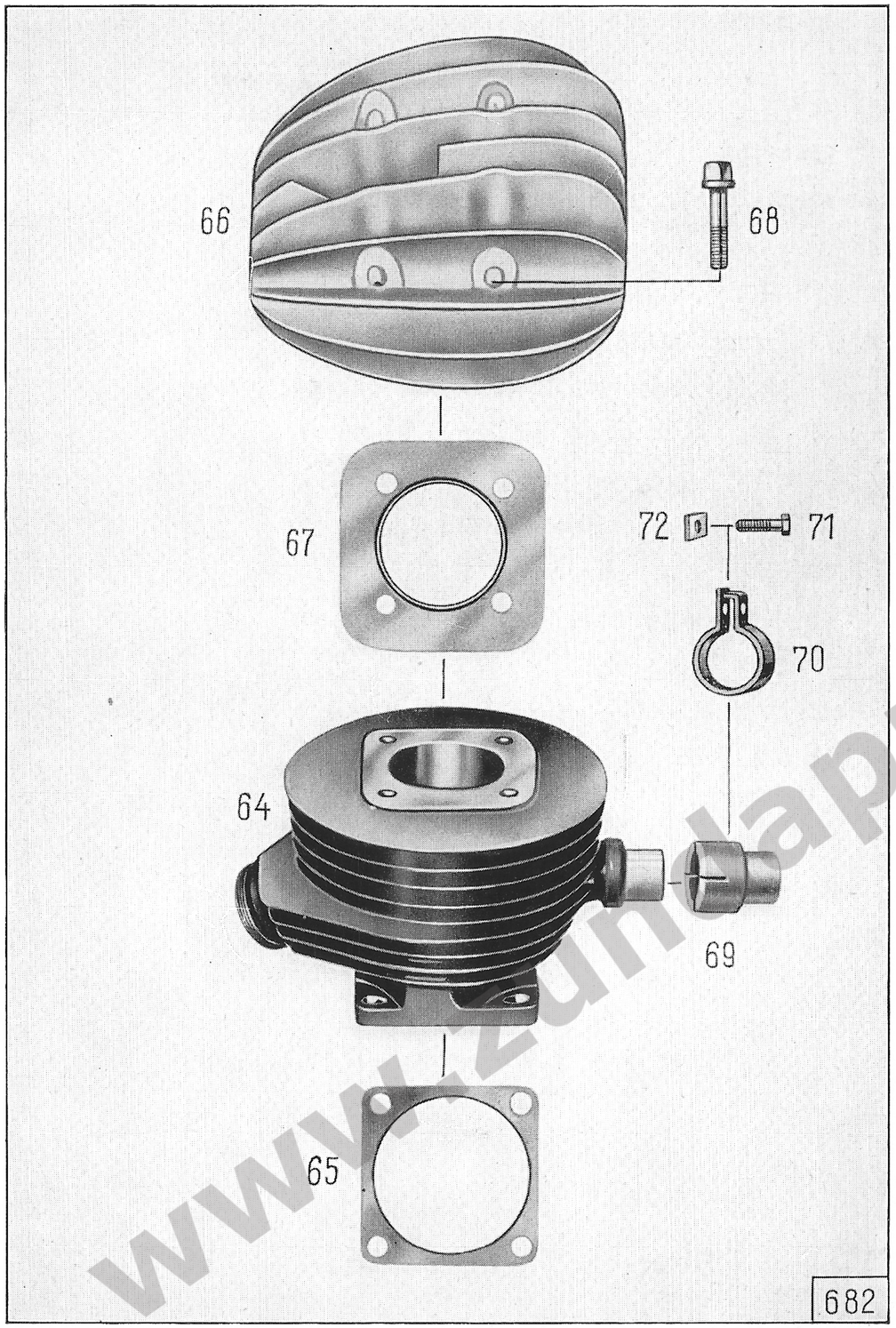

Illustration 4, Group M: b) Housing and Cylinder, Cylinder and Cylinder Head

Key No.	Spare Part No.	Description	No. of Pieces	Remarks
		Cylinder		
64	2162 z 210	cylinder	1	
65	468 z 182	cylinder base gasket	1	
66	273 z 153	cylinder head	1	
—	174 z 6	tapped bushing (for spark plug) ..	1	only for repair work
67	461 z 5	cylinder head gasket	1	
68	1551 z 016	square screw (to fasten cylinder head)	4	
69	177 z 107	insulating bushing	1	
70	1441 z 160	clamp	1	
71	—	hex. screw M 6 × 20 Sz DIN 933 k (to clamp)	1	
72	1001 z 217	square nut	1	

www.zundappveteranenclub.nl

Illustration 5, Group M: c) Drive Mechanism, Crankshaft, Connecting Rod, and Piston

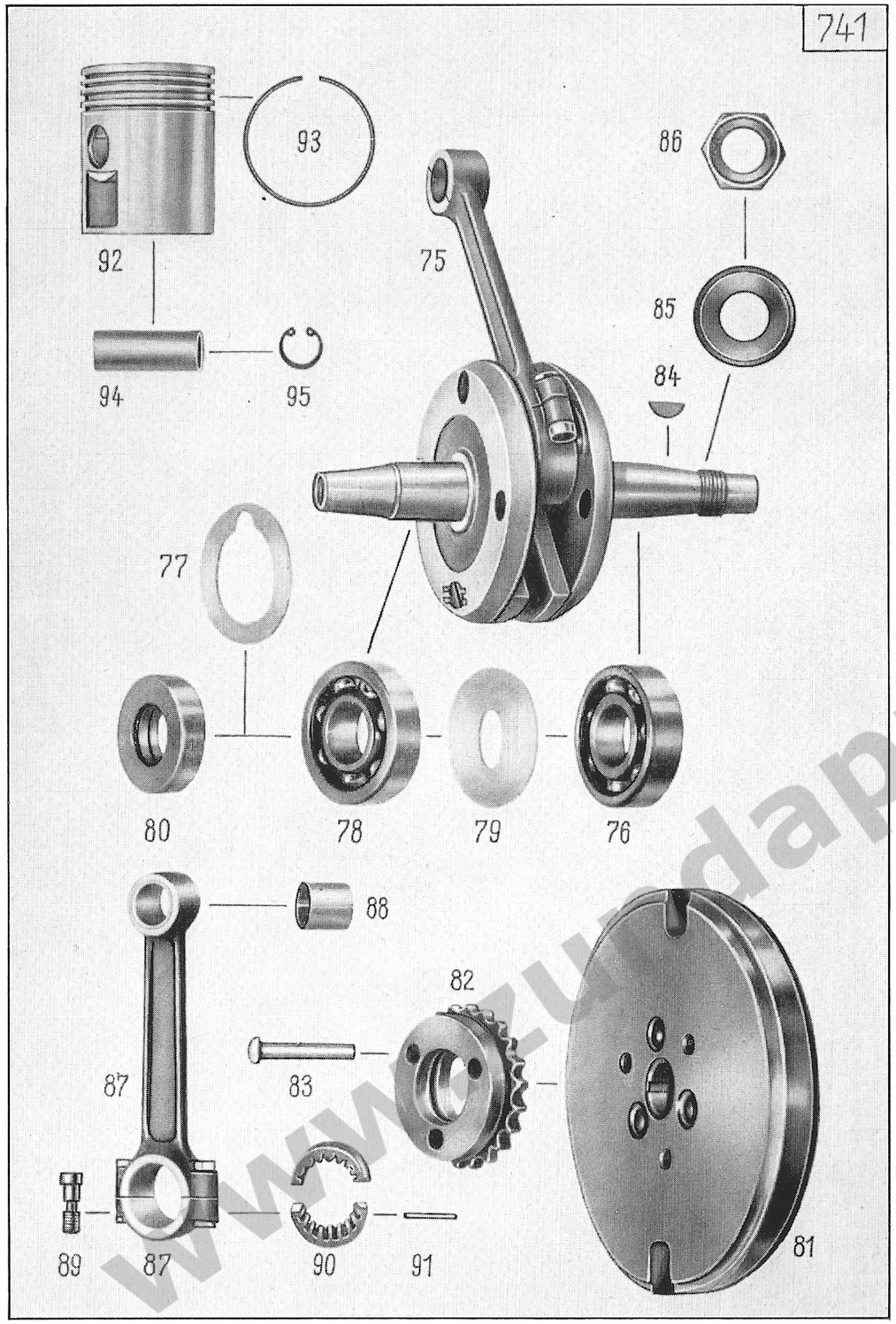

Illustration 5, Group M: c) Drive Mechanism, Crankshaft, Connecting Rod, and Piston

Key No.	Spare Part No.	Description	No. of Pieces	Remarks
		Crankshaft		
75	1950 k 202	crankshaft with connecting rod ..	1	
76	—	ball bearing M 25 DIN 615	1	
77	1301 z 132	spacer shim 41 × 61,5 × 0,1	as required	betw. ball-bearing and crankcase
—	1301 z 133	spacer shim 41 × 61,5 × 0,2		
—	1301 z 134	spacer shim 41 × 61,5 × 0,3		
—	1301 z 135	spacer shim 41 × 61,5 × 0,5		
—	1301 z 1012	spacer shim 41 × 61,5 × 0,15		
78	—	ball bearing M 25 DIN 615	1	
79	1281 z 382	covering washer	2	
80	—	radial gasket (oil seal) B 25 × 52 × 12 DIN 6503	1	
81	1310 z 58	flywheel with sprocket	1	
82	2101 z 152	sprocket 22 teeth (to flywheel)	1	
83	—	rivet, button head, 7 × 40 DIN 660	3	
84	—	key 4 × 6,5 DIN 6888	1	
85	1291 z 64	lock washer	1	
86	1001 z 20	hex. nut	1	
		Connecting Rod		
87	1160 k 151	connecting rod	1	
88	184 z 523	gudgeon pin bushing	1	
89	1571 z 1	connecting rod screw	2	
90	1874 z 1	cage ring	1	
91	1871 z 1	bearing needle	18	
		Piston		
92	883 z 152	piston 57,0 ⌀ (standard)	1	
—	2473 k 47-0	piston 57,5 ⌀ 1st oversize	1	
—	2473 k 48-0	piston 58,0 ⌀ 2nd oversize	1	
—	2473 k 49-0	piston 58,5 ⌀ 3rd oversize	1	
—	2473 k 50-0	piston 59,0 ⌀ 4th oversize	1	
93	1262 z 101	piston ring 57,0 mm ⌀ (standard) ..	3	
—	2442 k 41-0	piston ring 57,5 mm ⌀ 1st oversize	3	
—	2442 k 42-0	piston ring 58,0 mm ⌀ 2nd oversize	3	
—	2442 k 43-0	piston ring 58,5 mm ⌀ 3rd oversize	3	
—	2442 k 44-0	piston ring 59,0 mm ⌀ 4th oversize	3	
94	121 z 1060	gudgeon pin	1	
95	—	circlip 18 × 1 DIN 472	2	

www.zundappveteranenclub.nl

Illustration 6, Group M: f) Carburettor

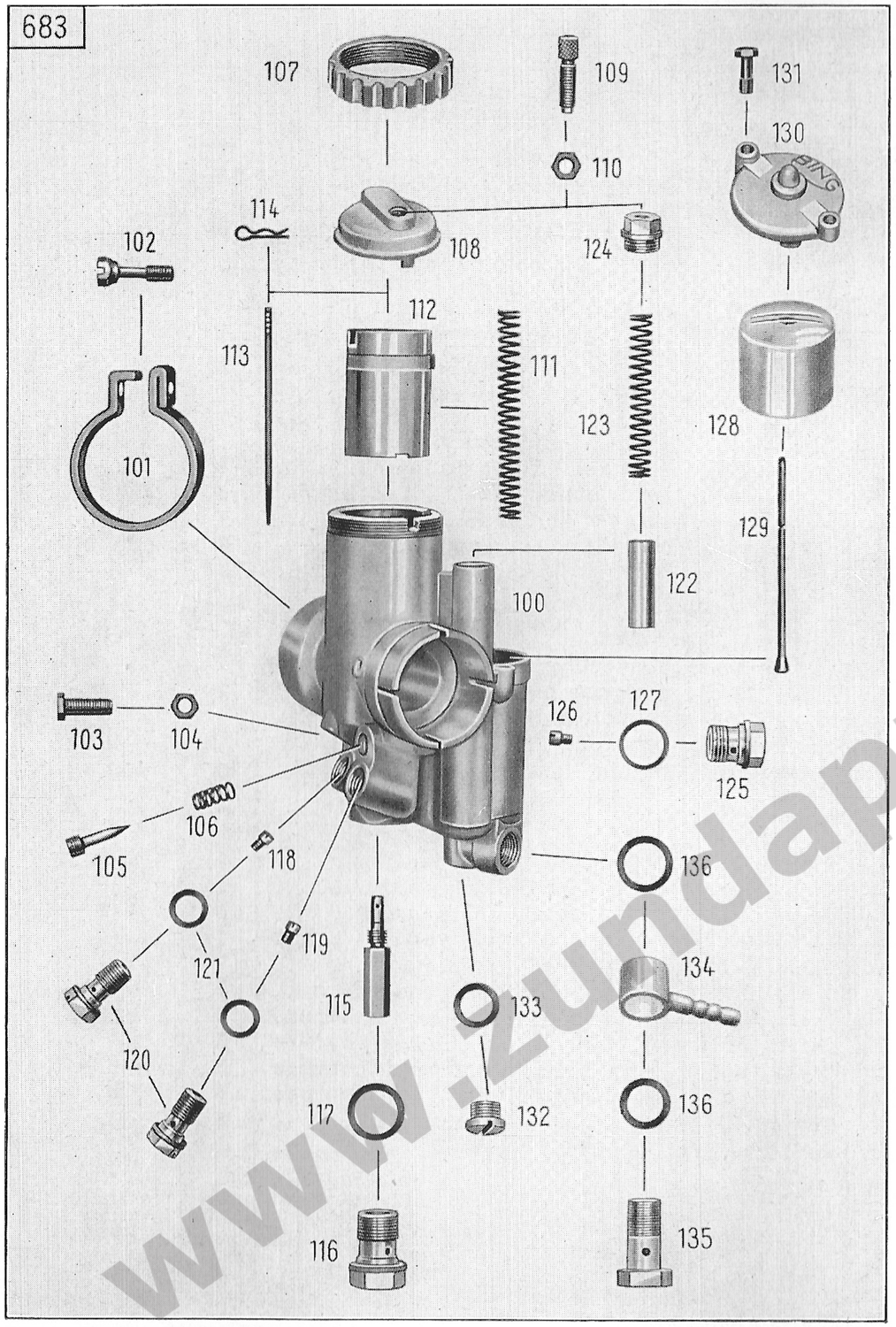

Key No.	Spare Part No.	Description	No. of Pieces	Remarks
		Carburettor		
—	6430 z 82	oblique-jet carburettor with starting device (model Bing 1/20/19)	1	
100	2403 k 95-0	carburettor housing	1	
101	2401 k 78-2	clamping ring	1	
102	2401 k 2-2	screw (to clamping ring)	1	
103	2401 k 3-2	idle running adjusting screw	1	
104	2401 k 6-2	nut (for idle running adjusting screw)	1	
105	2401 k 70-2	idle air screw	1	
106	2401 k 69-2	spring (to idle air screw)	1	
107	2403 k 51-0	nut (to seal cover)	1	
108	2403 k 97-0	cover plate	1	
109	2401 k 5-4	adjusting screw for throttle cable	1	
110	2401 k 6-2	nut (to throttle cable adjusting screw)	1	
111	2401 k 52-2	slide spring	1	
112	2403 k 98-0	gas slide	1	
113	2401 k 89-0	jet needle	1	
114	2401 k 80-2	clip (for jet needle)	1	
115	2404 k 32-0	needle jet (please quote No. stamped on it when ordering)	1	
116	2403 k 55-0	end screw	1	
117	2407 k 7-0	packing washer (for end screw)	1	
118	2404 k 23-0	jet (main jet, size 110)	1	
119	2404 k 23-0	jet (idling jet, size 45)	1	
120	2401 k 81-6	jet block	2	
121	2407 k 14-0	packing washer (to jet block)	2	
122	2403 k 99-0	starter slide	1	
123	2401 k 90-2	pressure spring	1	
124	2401 k 91-0	lock screw	1	
—	2401 k 96	lock washer	1	

www.zundappveteranenclub.nl

Illustration 6, Group M: f) Carburettor

Key No.	Spare Part No.	Description	No. of Pieces	Remarks
109	2401 k 5-4	adjusting screw for throttle cable	1	
110	2401 k 6-2	nut (to throttle cable adjusting screw)	1	
125	2401 k 92-0	end screw	1	
126	2404 k 23-0	jet (starter jet, size 80)	1	
127	2407 k 17-0	packing washer (to end screw) ..	1	
128	2404 k 3-0	float	1	
129	2401 k 93-0	float needle	1	
130	2403 k 100-0	float chamber cover	1	
131	2401 k 61-2	set screw (to cover)	2	
132	2401 k 94-0	lock screw	1	
133	2407 k 18-0	packing washer (to lock screw) ..	1	
134	2403 k 101-0	swivel type pipe connector	1	
135	2401 k 95-0	set screw	1	
136	2407 k 19-0	packing washer (to set screw)	2	

www.zundappveteranenclub.nl

Illustration 7, Group M: f) Carburettor, Intake Silencer and Air Cleaner

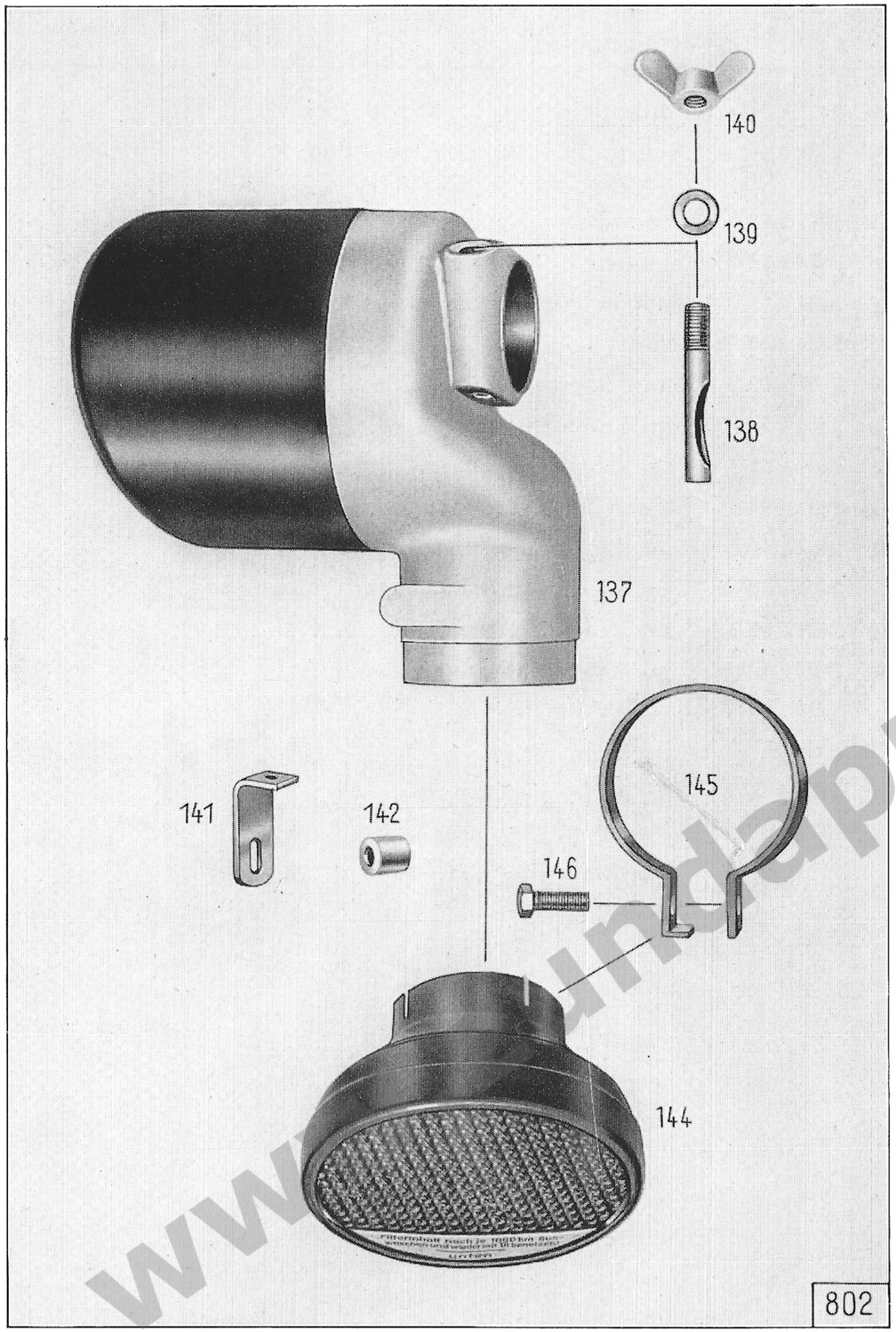

Illustration 7, Group M: f) Carburettor, Intake Silencer and Air Cleaner

Key No.	Spare Part No.	Description	No. of Pieces	Remarks
		Intake Silencer		
137	6350 z 138	intake silencer	1	
138	121 z 1104	clamping bolt (to fasten intake silencer to carburettor)	1	
139	—	spring washer A 8 DIN 137 k	2	
140	—	wing nut M 8 DIN 315 k	1	
141	211 z 276	supporting clip	1	
142	1241 z 036	spacer ring	1	
—	—	hex. screw M 6 × 30 DIN 931 k (to fasten intake silencer to crank-case cover)	1	
		Air Cleaner		
144	6410 k 210	air filter	1	
145	1441 k 306	clamp	1	
146	—	hex. screw M 6 × 20 DIN 933 k (to clamp) ..	1	

www.undappveteranenclub.nl

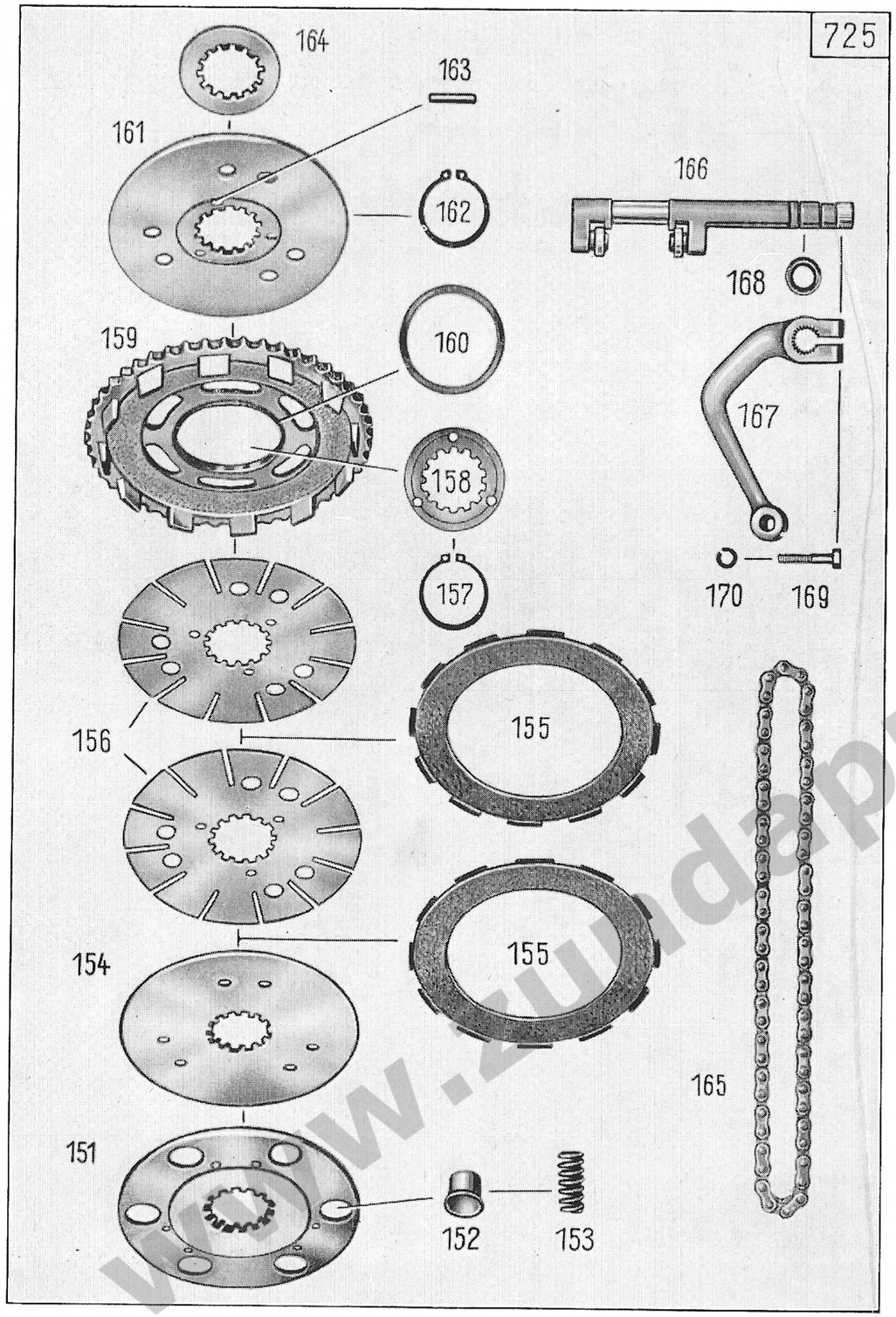

Illustration 8, Group M: g) Clutch, Clutch, Clutch Operating Mechanism

Key No.	Spare Part No.	Description	No. of Pieces	Remarks
		Clutch		
151	921 z 69	spring plate	1	
152	781 z 273	spring cup (in spring plate)	6	
153	321 z 564	clutch spring	6	
154	921 z 67	clutch pressure plate	1	
155	920 z 52	clutch disk with lining	2	
156	921 z 68	clutch disk	2	
157	—	circlip 35 × 1,5 DIN 471	1	with ground side surfaces
158	1231 z 212	spacer ring	1	
159	2100 z 165	clutch sprocket with bushing, 48 teeth	1	
160	184 z 317	bushing (in clutch sprocket)	1	
161	921 z 203	clutch plate	1	
162	—	circlip 35 × 1,5 DIN 471	1	with ground side surfaces
163	1691 z 113	push rod	3	
164	1231 z 213	pressure ring	1	
165	—	roller chain 62 links, endless 9,5 × 9,5 DIN 73232	1	
		Clutch operating mechanism		
166	1940 z 25	clutch pressure bar, complete	1	
167	671 z 341	clutch lever (for clutch pressure bar)	1	
168	1236 z 222	packing washer	1	
169	—	hex. screw M 6 × 28 DIN 931 k (to fasten clutch lever to pressure bar)	1	
170	—	spring washer A 6 DIN 127	1	
—	—	hex. nut M 6 DIN 934	1	

www.zundappveteranenclub.nl

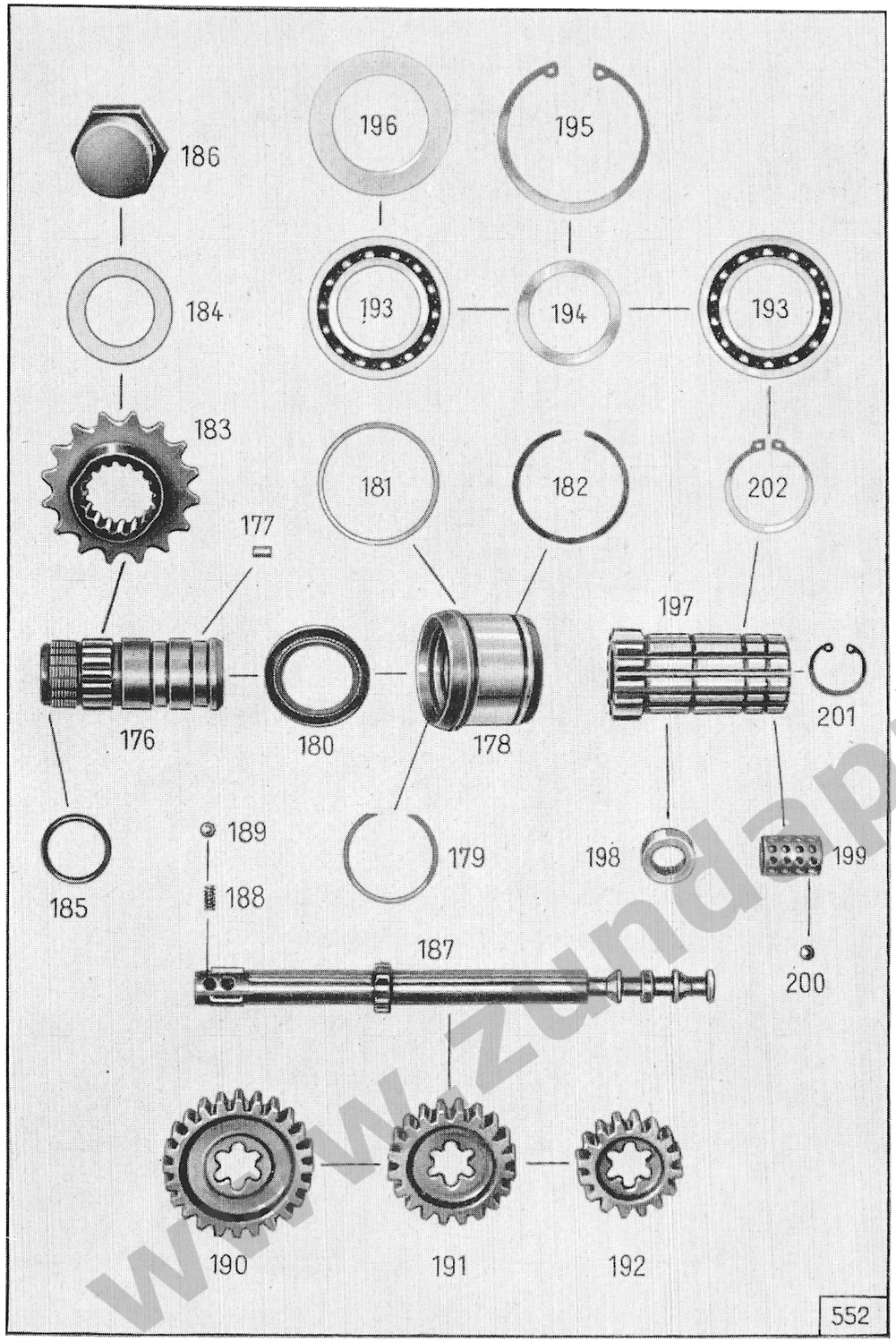

Key No	Spare Part No.	Description	No. of Pieces	Remarks
		Selector Shaft		
176	961 z 125	final drive shaft	1	
177	1871 z 07	roller	38	
178	1871 z 154	bearing ring (to left half of crankcase)	1	
179	1251 z 99	internal circlip } in order to adjust	2	at option
—	1251 z 251	internal circlip } bearing play inside	2	at option
—	1251 z 252	internal circlip } the bearing ring	2	at option
180	—	radial gasket (oil seal) B 32 × 45 × 7 DIN 6503 (in bearing ring)	1	
181	1301 z 603	spacer shim 48,1 × 52,3 × 0,5	as required	betw. bearing ring and half of crankcase
—	1301 z 604	spacer shim 48,1 × 52,3 × 0,3	as required	betw. bearing ring and half of crankcase
—	1301 z 605	spacer shim 48,1 × 52,3 × 0,2	as required	betw. bearing ring and half of crankcase
182	1251 z 176	snap ring (to fasten bearing ring in half of crankcase)	1	
183	2101 z 60	sprocket 16 teeth (on final drive shaft)	1	
184	1291 z 65	lock washer	1	
185	1236 z 220	packing washer	1	
186	—	lock nut M 30 × 1,5 DIN 7605 (to fasten sprocket to final drive shaft)	1	
187	1921 z 701	selector shaft	1	
188	321 z 312	pressure spring	2	
189	—	ball 6 mm C DIN 5401	3	
190	2131 z 303	gear wheel 1st speed 24 teeth	1	
191	2131 z 304	gear wheel 2nd speed 20 teeth	1	
192	2131 z 307	gear wheel 3rd speed 17 teeth	1	
193	—	ball bearing 16 007 DIN 625 (to right half of crankcase)	2	
194	—	spacer ring 35 × 45 × 2 DIN 988 (between the ball bearings)	1	
195	—	circlip 62 × 2 DIN 472	1	
196	1301 z 133	covering washer (betw. crankcase and ball bearing)	1	

www.zundappveteranenclub.nl

Illustration 9, Group G: c) Shafts and Gears, Selector Shaft

Key No.	Spare Part No.	Description	No. of Pieces	Remarks
197	960 z 101	clutch hub (simultaneously 4th speed)	1	
198	184 z 324	bearing bushing (in clutch hub) ..	1	
199	1871 z 151	ball cage	1	
200	—	ball 4 mm C DIN 5401	40	
201	—	circlip 23 × 1,2 DIN 472	1	
202	—	circlip 35 × 1,5 DIN 471 (to fasten clutch hub to half of crankcase)	1	with ground side surfaces

www.zundappveteranenclub.nl

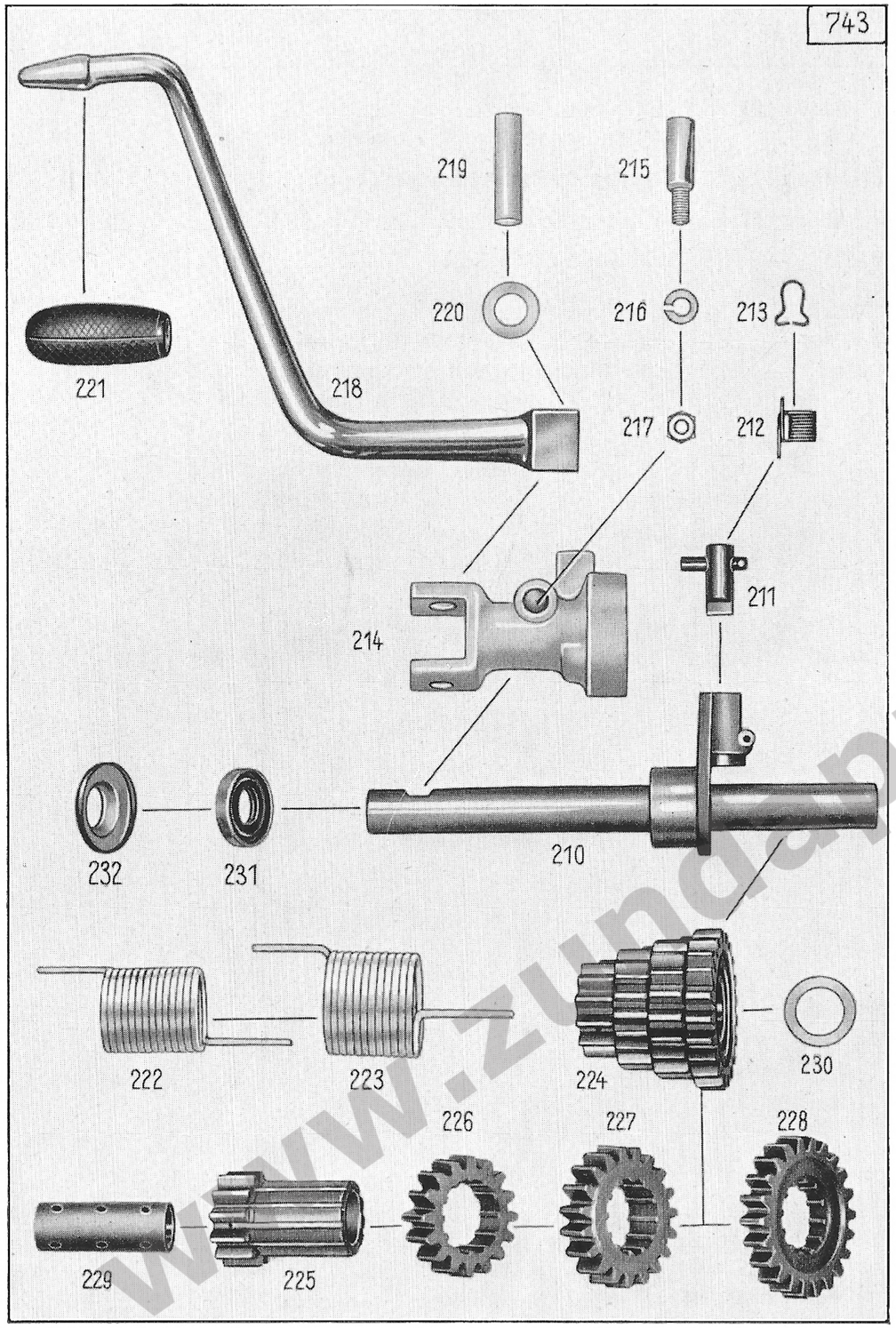

Key No.	Spare Part No.	Description	No. of Pieces	Remarks
		Starter Shaft		
210	1940 z 204	internal starter shaft	1	
211	1690 z 3	engaging pin with return pin	1	
212	321 z 314	lock spring	1	
213	211 z 201	spring clip	1	
214	961 z 212	connecting member (on starter shaft)	1	
215	121 z 553	cotter pin (to fasten connecting member on starter shaft)	1	
216	—	spring washer A 6 DIN 127 k	1	
217	—	hex. nut M 6 DIN 934 k	1	
218	901 z 205	starter lever	1	
219	1691 z 312	riveting pin	1	
220	—	spring washer A 10 DIN 137 k	1	
221	616 z 25	rubber sleeve (on starter lever) ..	1	
222	321 z 553	return spring	1	
223	321 z 554	return spring	1	
224	2130 z 101	counter gear wheel block, compl.	1	
225	2131 z 238	gear wheel 1st speed 12 teeth	1	
226	2131 z 239	gear wheel 2nd speed 16 teeth	1	
227	2131 z 247	gear wheel 3rd speed 19 teeth	1	
228	2131 z 237	drive gear wheel 22 teeth	1	
229	184 z 316	bushing	1	
230	1301 z 177	spacer shim 18,2 × 25,7 × 0,5	as required	betw. counter gear wheel block and right half of crankcase
—	1301 z 367	spacer shim 18,2 × 25,7 × 0,2		
—	1301 z 368	spacer shim 18,2 × 25,7 × 0,3		
231	—	gasket "Diring" B 17 × 30 × 7 DIN 6503	1	
232	781 z 274	protective cap (for gasket "Diring")	1	

www.zundappveteranenclub.nl

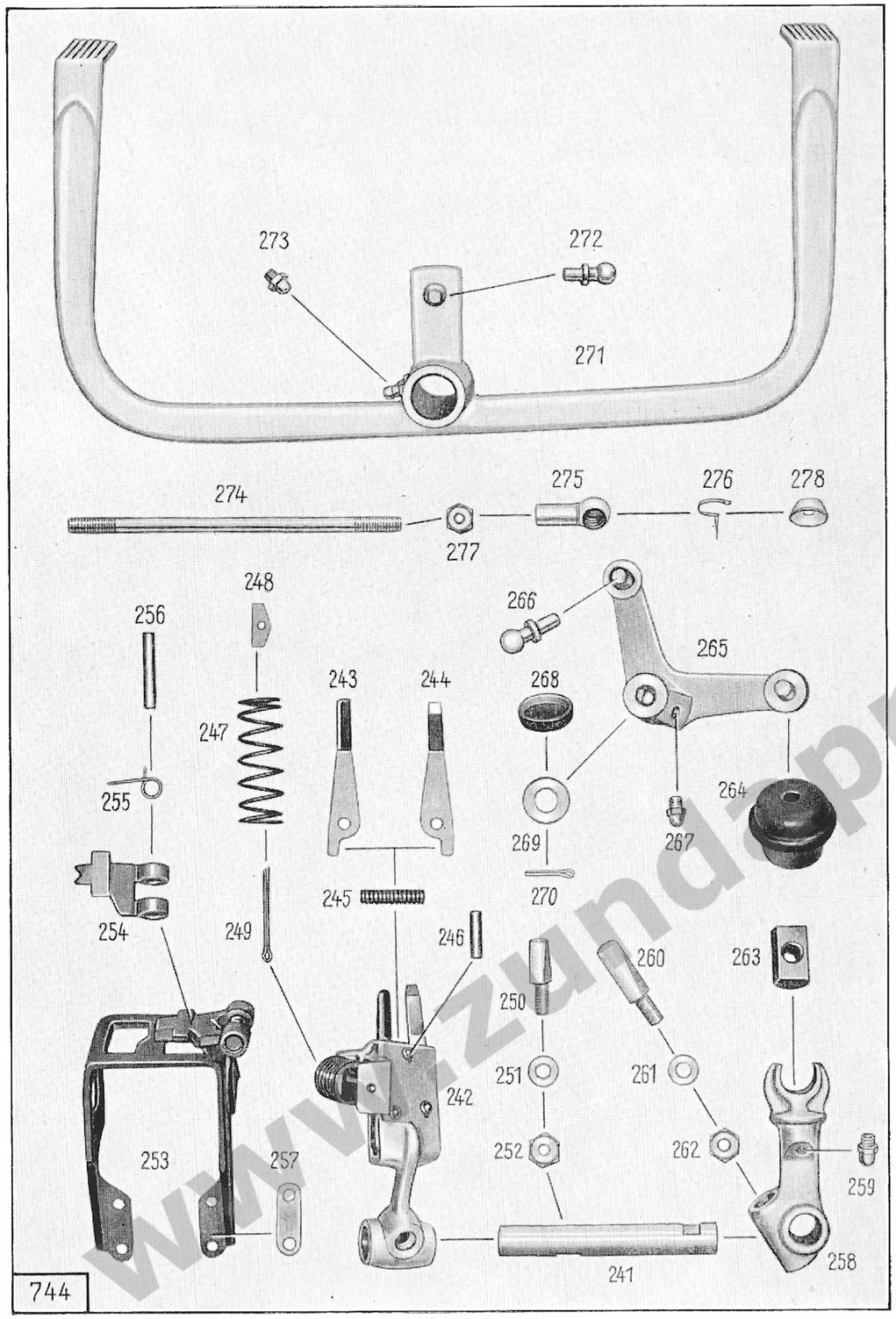

Key No.	Spare Part No.	Description	No. of Pieces	Remarks
		Footshift Mechanism		
241	1941 z 312	footshift shaft (for gear selector fork)	1	
242	670 z 233	gear selector fork, complete	1	
243	841 z 40	selector finger, left-h.	1	
244	841 z 41	selector finger, right-h.	1	
245	321 z 317	pressure spring	1	
246	—	riveting pin A 5 h 9 × 20 DIN 7341	3	
247	321 z 316	return spring	1	
248	1281 z 359	joint	2	
249	—	split pin 3 × 35 DIN 94	1	
250	121 z 1112	cotter pin (to fasten gear selector fork to footshift shaft)	1	
251	—	spring washer B 6 DIN 137 k	2	
252	—	hex. nut M 6 DIN 934 k	1	
253	200 z 107	gear selector support with ratchet	1	
254	841 z 39	ratchet	1	
255	321 z 322	ratchet spring	1	
256	—	riveting pin A 6 h 9 × 32 DIN 7341	1	
257	1281 z 242	joint } to gear selector support	4	at option
—	1281 z 243	joint } to gear selector support	4	at option
—	1281 z 244	joint } to gear selector support	4	at option
258	671 z 315	gearshift lever	1	
259	1080 z 1	grease nipple	1	
260	121 z 553	cotter pin (to fasten gearshift lever to shaft)	1	
261	—	spring washer B 6 DIN 137	2	
262	—	hex. nut M 6 DIN 934	1	
263	574 z 6	sliding block (to gearshift lever)	1	
264	616 z 215	rubber sleeve (to gearshift lever)	1	
265	670 z 214	bell crank	1	

www.zundappveteranenclub.nl

Illustration 11, Group G: d) Footshift Mechanism

Key No.	Spare Part No.	Description	No. of Pieces	Remarks
266	—	ball pivot B 10 × 8 DIN 71803	1	
267	—	grease nipple D 6 DIN 71422	1	
268	1236 z 310	rubber ring	2	
269	—	washer 10,5 DIN 125 k	1	
270	—	split pin 3 × 18 DIN 94 k	1	
271	680 z 33	footshift lever	1	
272	131 z 546	ball pivot	1	
273	1080 z 1	grease nipple	1	
274	1651 z 312	gearshift rod	1	
275	—	ball pot B 10 DIN 71805 k	2	
276	—	safety clip S 10 DIN 71805 k	2	
277	—	hex. nut M 6 DIN 934 k	1	
278	616 z 11	rubber sleeve	2	

www.zundappveteranenclub.nl

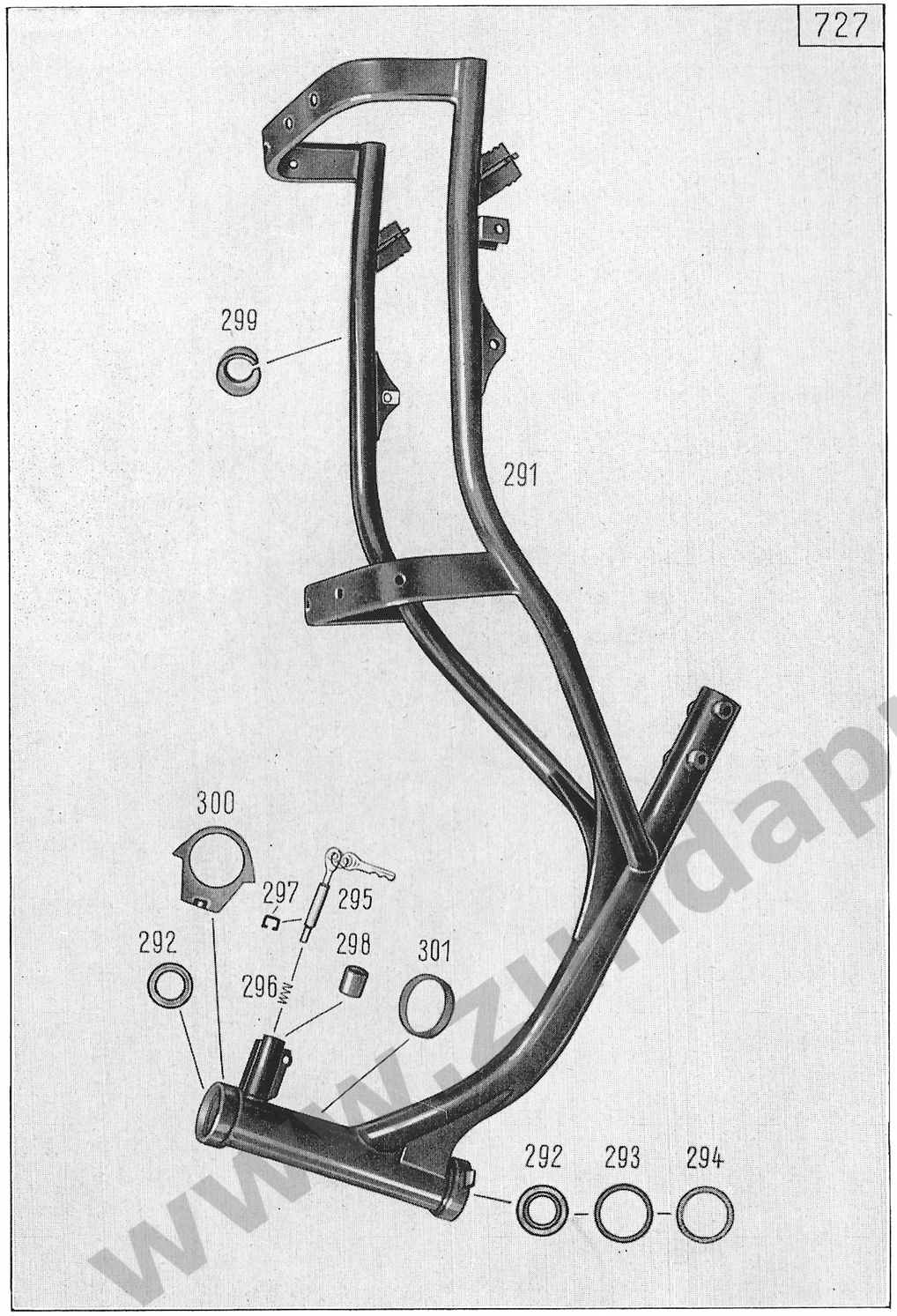

Key No.	Spare Part No.	Description	No. of Pieces	Remarks
		Frame		
291	6690 z 325	frame	1	
292	1871 z 171	frame race	2	
—	—	ball 6,35 mm III DIN 5401	38	
293	1231 z 210	covering washer	1	
294	1236 z 333	packing washer	1	
295	6040 z 274	antitheft lock	1	
296	321 z 537	spring (to antitheft lock)	2	
297	211 z 250	clip (to fasten antitheft lock)	1	
298	1236 z 338	ring (to bushing for antitheft lock)	1	
—	—	hex. screw M 5 × 10 DIN 933 k (to fasten cable for earth terminal to frame)	1	
—	—	spring washer B 5 DIN 137	1	
—	—	hex. nut M 5 DIN 934 k	1	
299	616 z 234	rubber sleeve (to fuel tank)	4	
300	1236 z 316	rubber ring (distance piece between steering tube and cover)	1	
301	1236 z 323	rubber ring (for fixation of cables)	2	

www.zundappveteranenclub.nl

Illustration 13, Group R: a) Frame, Front Engine Carrier and Side Stand

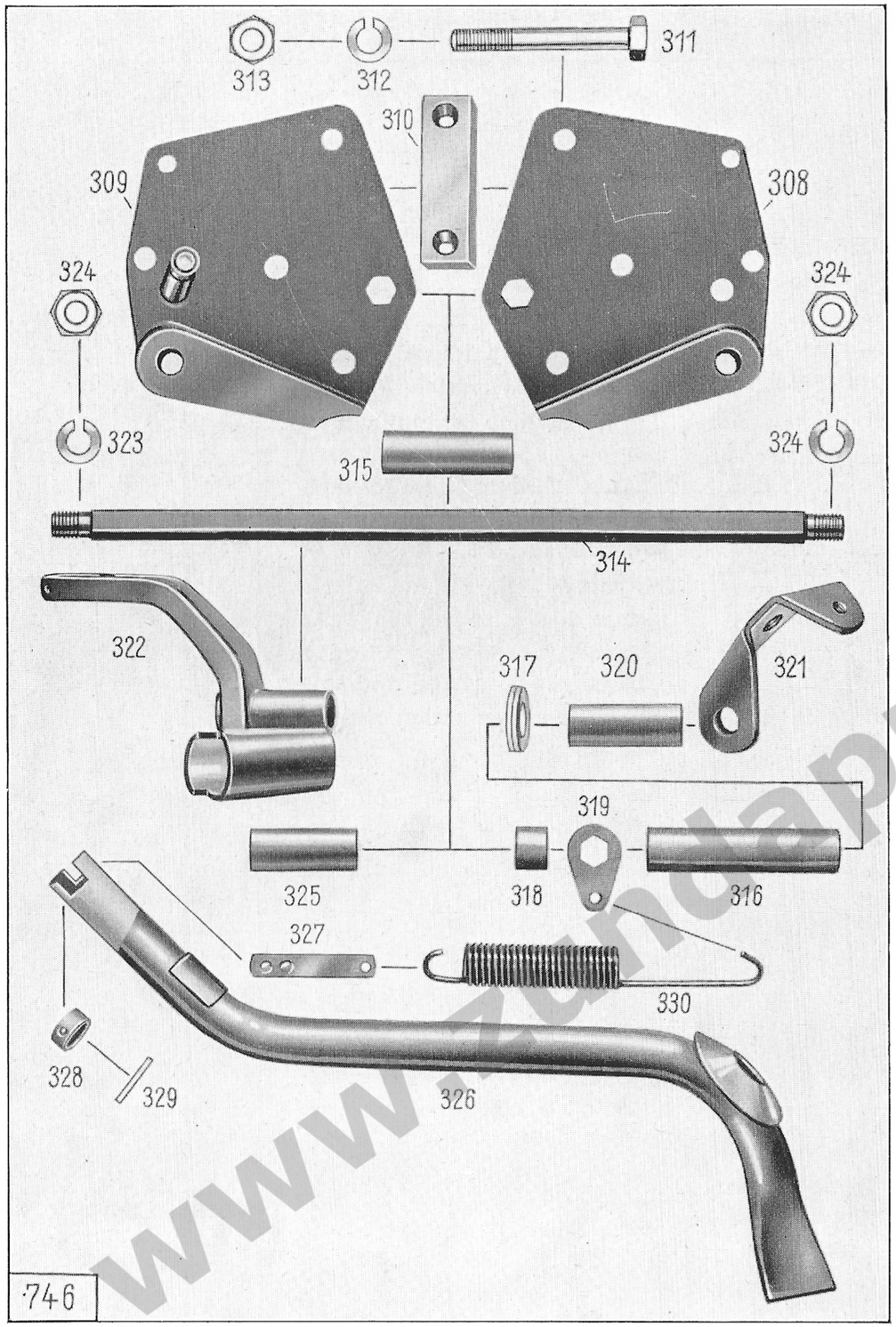

Illustration 13, Group R: a) Frame, Front Engine Carrier and Side Stand

Key No.	Spare Part No.	Description	No. of Pieces	Remarks
		Front Engine Carrier		
308	1180 z 140	engine suspending plate, left-h. ..	1	
309	1180 z 141	engine suspending plate, right-h.	1	
310	1143 z 101	joint plate	1	
311	—	hex. screw M 10 × 80 DIN 931 k (to fasten engine suspending plates to frame)	2	
312	—	spring washer A 10 DIN 127 k	2	
313	—	hex. nut M 10 DIN 934 k	2	
314	121 z 1099	front bearing bolt	1	
315	1331 z 778	spacer tube (between engine suspension plates)	1	
316	1331 z 813	spacer tube, right-hand	1	
317	1301 z 656	spacer washer	1	
318	1331 z 903	spacer tube	1	
319	1141 z 2209	bracket (for return spring)	1	
320	1331 z 767	spacer tube (for footshift lever) ..	1	
321	631 z 562	front foot board support, right-h. ..	1	
322	630 z 509	front foot board support, left-h. ..	1	
323	—	spring washer A 12 DIN 127 k	2	
324	—	hex. nut M 12 DIN 934 k (on bearing bolt)	2	
		Side Stand		
325	1331 z 904	spacer tube	1	
326	1750 z 332	side stand, complete	1	
327	1141 z 2210	supporting plate	1	
328	1241 z 365	retaining ring	1	
329	—	pin 3 × 25 DIN 1473	1	
—	—	packing washer A 6 × 10 DIN 7603	1	
—	—	grease nipple D 6 DIN 71412	1	
330	321 z 588	return spring	1	

www.zandappveteranenclub.nl

Illustration 14, Group R: a) Frame, Rear Engine Carrier and Swinging Fork

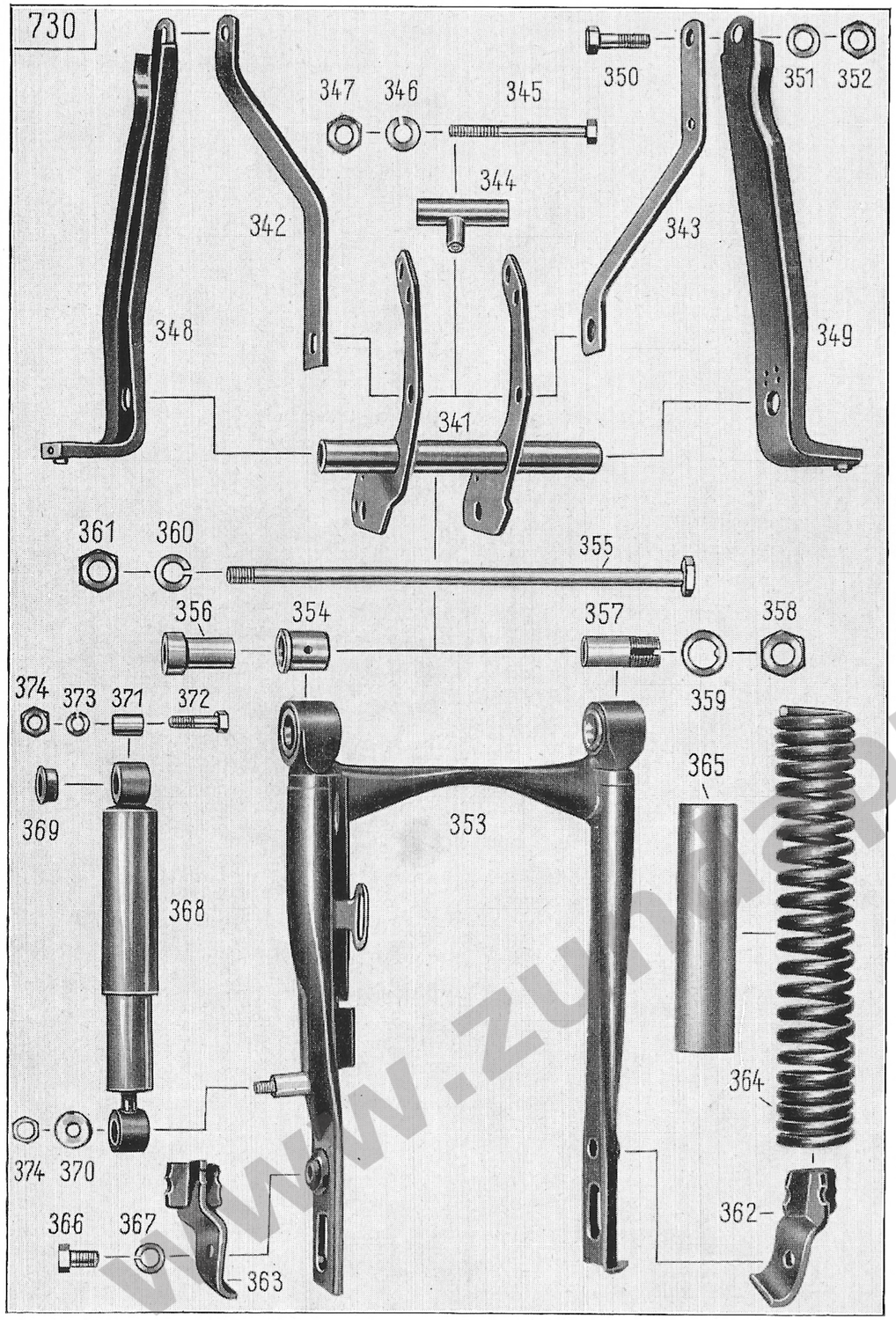

Illustration 14, Group R: a) Frame, Rear Engine Carrier and Swinging Fork

Key No.	Spare Part No.	Description	No. of Pieces	Remarks
		Rear Engine Carrier		
341	630 z 508	rear engine carrier	1	
342	1751 z 263	bracket, left-h.	1	
343	1751 z 264	bracket, right-h.	1	
344	1330 z 208	spacer tube	1	
345	—	hex. screw M 10 × 90 DIN 931 k (to fasten brackets to rear engine carrier)	1	
346	—	spring washer A 10 DIN 127 k	1	
347	—	hex. nut M 10 DIN 934 k	1	
348	1750 z 225	brace, left-h.	1	
349	1750 z 224	brace, right-h.	1	
350	—	hex. screw M 10 × 35 DIN 931 k (to fasten rear engine carrier to frame)	2	
351	—	spring washer B 10 DIN 137 k	2	
352	—	hex. nut M 10 DIN 934 k	2	
		Swinging Fork		
353	710 z 247	rear swinging fork	1	
354	184 z 531	bushing for swinging fork	2	
355	131 z 540	bearing bolt	1	
356	1330 z 202	bearing tube	1	
357	1331 z 876	bearing tube	1	
358	1001 z 224	hex. nut	2	
359	1301 z 1022	washer	1	
360	—	spring washer A 14 DIN 127 k	1	
361	—	hex. nut M 14 × 1,5 DIN 936 k	1	
—	1080 z 1	grease nipple	2	
—	—	packing washer A 6 × 10 DIN 7603	2	
—	1141 z 2228	covering sheet	1	
—	—	hex. screw M 5 × 10 DIN 933 k (to fasten covering sheet to swinging fork)	2	
—	—	spring washer B 5 DIN 137 k	2	

www.zuhlappveteranenclub.nl

Illustration 14, Group R: a) Frame, Rear Engine Carrier and Swinging Fork

Key No.	Spare Part No.	Description	No. of Pieces	Remarks
362	630 z 494	lower spring carrier, right-hand ..	1	
363	630 z 493	lower spring carrier, left-hand	1	
364	321 z 590	spring	2	
365	616 z 258	rubber sleeve (damper)	2	
366	—	hex. screw M 10 × 18 DIN 933 k (to fasten spring carrier to swinging arm)	2	
367	—	spring washer A 10 DIN 127 k	2	
368	6350 z 101	shock absorber	1	
369	2376 k 2	rubber sleeve	4	
370	1301 z 168	washer	1	
371	1331 z 885	spacer tube	1	
372	—	hex. screw M 8 × 35 DIN 931 k (to fasten shock absorber to frame)	1	
373	—	spring washer A 8 DIN 127 k	1	
374	—	hex. nut M 8 DIN 934 k	2	

www.zundappveteranenclub.nl

Illustration 15, Group R: b) Foot Boards

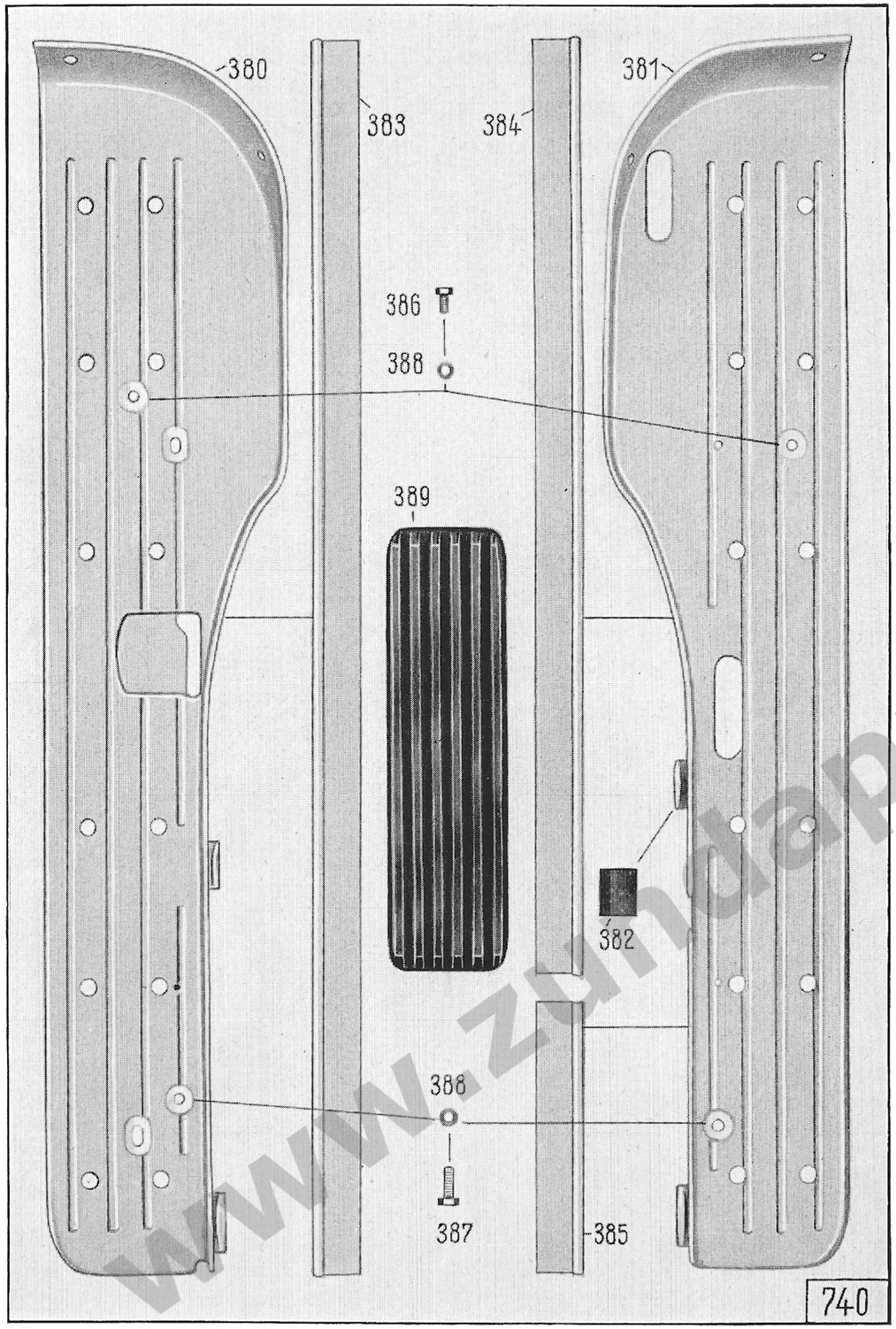

Illustration 15, Group R: b) Foot Boards

Key No.	Spare Part No.	Description	No. of Pieces	Remarks
		Foot Boards		
380	470 z 44	foot board, left-hand	1	
381	470 z 37	foot board, right-hand	1	
382	1596 z 404	rubber hose	4	
383	1397 z 27	front beading, left-h.	1	
—	1397 z 28	rear beading, left-h.	1	
384	1397 z 25	front beading	1	
385	1397 z 26	rear beading	1	
386	—	hex. screw M 6 × 12 DIN 933 k (to fasten foot board to foot board carrier)	2	
387	—	hex. screw M 6 × 20 DIN 933 k (to fasten foot board to foot board carrier)	2	
388	—	spring washer B 6 DIN 137 k	4	
389	1146 z 65	rubber foot mat	4	

www.zundappveteranenclub.nl

Illustration 16, Group R: d) Mudguards, Front Mudguard

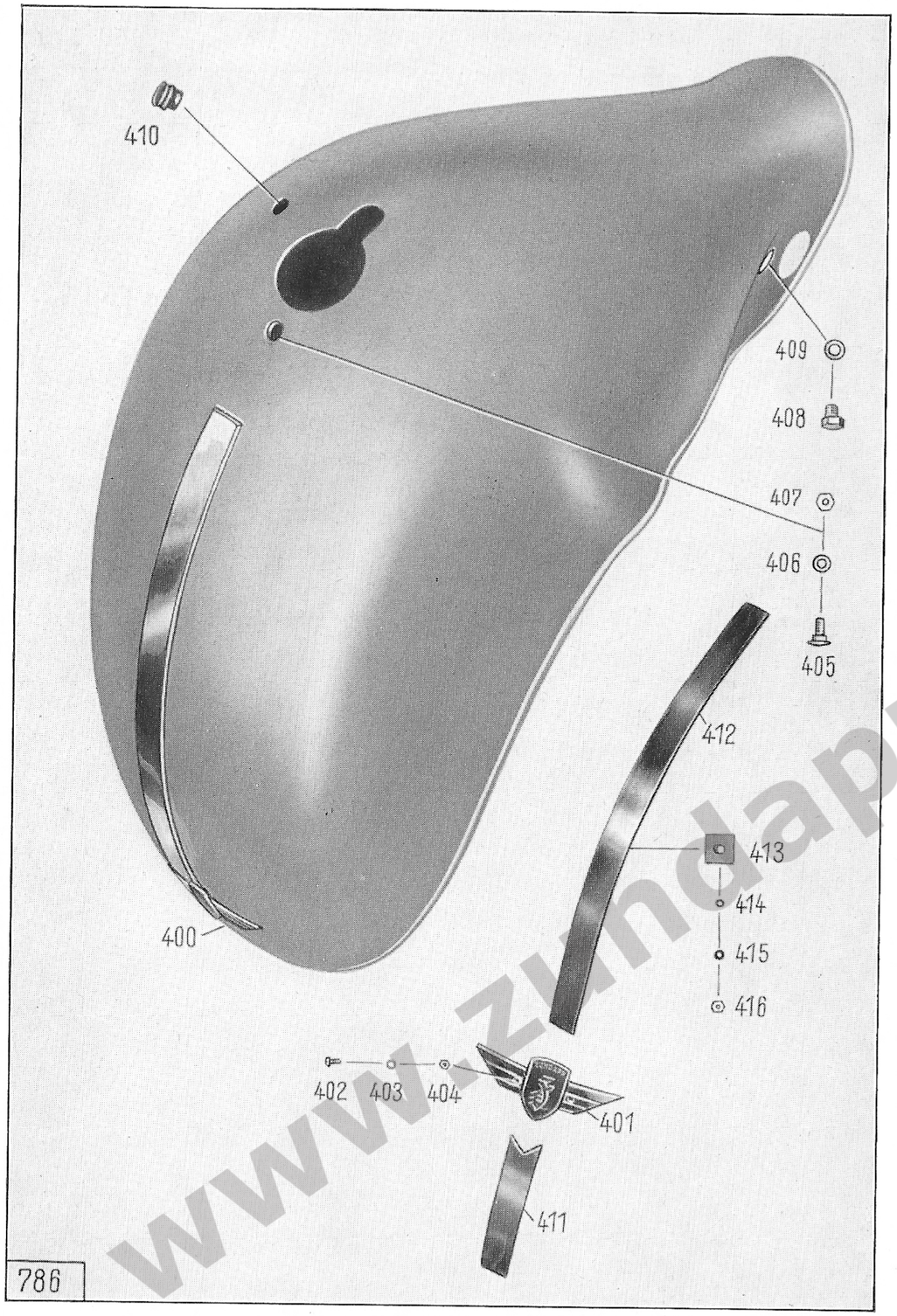

Illustration 16, Group R: d) Mudguards, Front Mudguard

Key No.	Spare Part No.	Description	No. of Pieces	Remarks
		Front Mudguard		
400	6370 z 156	front mudguard	1	please quote colour
401	1483 z 65	manufacturer's plate	1	
402	—	screw, countersunk raised head AM 3 × 6 DIN 91 crp	2	
403	—	spring washer A 3 DIN 137 k	2	
404	—	hex. nut M 3 DIN 934 k	2	
405	—	screw M 6 × 15 DIN 603 k (to fasten front mudguard to swinging fork)	1	
406	—	spring washer A 6 DIN 127 k	1	
407	—	hex. nut M 6 DIN 934 k	1	
408	—	hex. screw M 8 × 10 DIN 933 crp (to fasten front mudguard to swinging fork)	2	
409	—	spring washer A 8 DIN 137 k	2	
410	616 z 216	grommet (to front brake cable)	1	
411	943 z 34	moulding	1	
412	943 z 35	moulding	1	
413	1550 z 117	screw	4	
414	—	spring washer A 4 DIN 127 k	4	
415	—	spring washer A 4 DIN 137 k	4	
416	—	hex. nut M 4 DIN 934 k	4	

www.zundappveteranenclub.nl

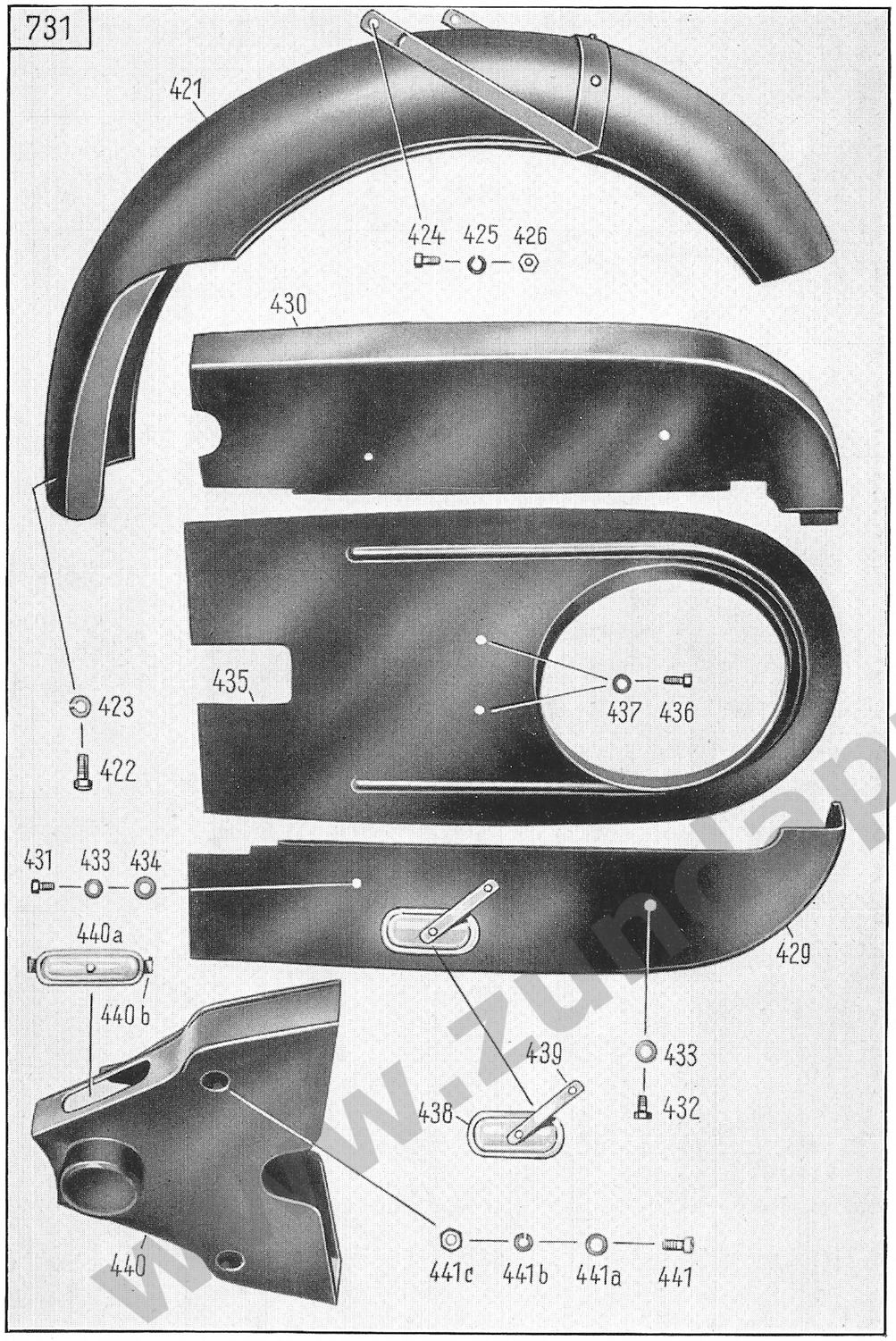

Key No.	Spare Part No.	Description	No. of Pieces	Remarks
		Rear Mudguard		
421	6370 z 176	rear mudguard	1	
422	—	hex. screw M 8 × 18 DIN 933 k (to fasten rear mudguard to rear engine carrier)	1	
423	—	spring washer A 8 DIN 127 k	1	
424	—	hex. screw M 6 × 10 DIN 933 k (to fasten rear mudguard to frame)	2	
425	—	spring washer A 6 DIN 127 k	2	
426	—	hex. nut M 6 DIN 934 k	2	
		Chain Case		
429	1500 z 277-8	chain case, lower front part	1	
430	1500 z 259-8	chain case, upper front part	1	
431	—	hex. screw M 6 × 10 DIN 933 k (to fasten chain case front parts to swinging fork)	2	
432	—	hex. screw M 6 × 12 DIN 933 k (to fasten chain case front parts to swinging fork)	2	
433	—	spring washer B 6 DIN 137 k	4	
434	—	washer 6,4 DIN 125 k	2	
435	1501 z 184-8	chain case, rear part	1	
436	—	hex. screw M 6 × 12 DIN 933 k (to fasten chain case rear part to brake cover)	2	
437	—	spring washer B 6 DIN 137 k	2	
438	230 z 230	cap	1	
439	331 z 303	laminated spring	1	
—	—	rivet, button head 4 × 6 DIN 660 (to fasten laminated spring to cap as well as to chain case front part)	2	
—	—	washer 4,3 DIN 125 k	1	
—	—	spring washer B 5 DIN 137 k	1	

www.zundappveteranenclub.nl

Illustration 17, Group R: d) Mudguards, Rear Mudguard and Chain Case

Key No.	Spare Part No.	Description	No. of Pieces	Remarks
440	650 z 397	protective cover	1	
440a	230 z 232	cap	1	
440b	331 z 328-3	laminated spring	1	
—	—	rivet, button head 4 × 6 DIN 660 (to fasten laminated spring to cap)	1	
441	—	cylindrical screw M 8 × 15 DIN 84 k (to fasten protective cover to rear engine carrier)	2	
441a	—	spring washer A 8 DIN 137 k	2	
441b	—	spring washer A 8 DIN 127 k	2	
—	1301 z 52	shim 8,5 × 18 × 0,2	as required	
—	1301 z 53	shim 8,5 × 18 × 0,3		
—	1301 z 54	shim 8,5 × 18 × 0,4		
441c	—	hex. nut M 8 DIN 934 k	2	

www.zundappveteranenclub.nl

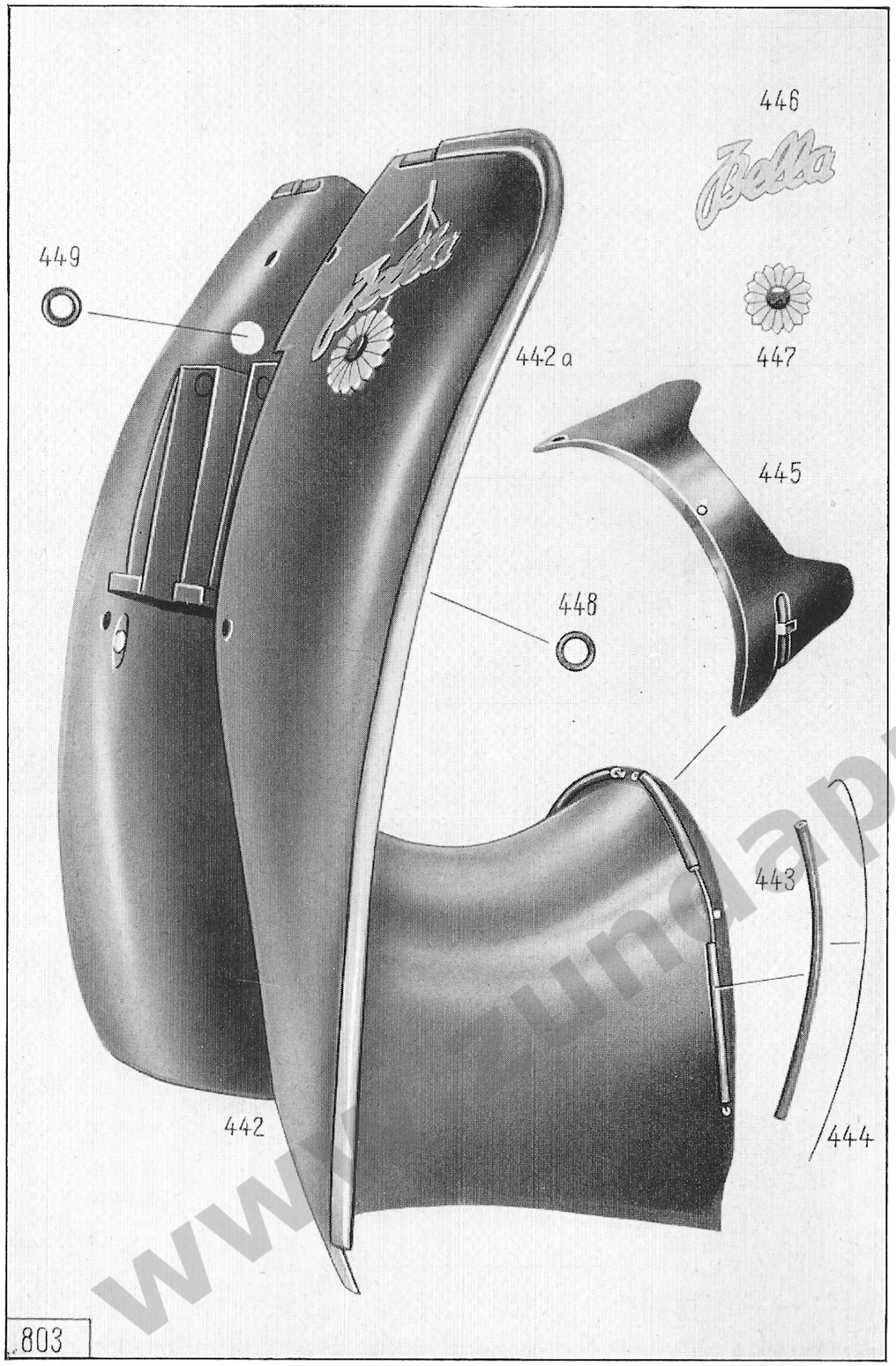

Key No.	Spare Part No.	Description	No. of Pieces	Remarks
		Front Shield		
442	650 k 430	front shield with wind guiding shield, complete	1	please quote colour
442a	943 z 36	moulding, left-hand	1	
—	943 z 37	moulding, right-hand	1	
—	—	screw, countersunk raised head, AM 4 × 12 DIN 91 crp	8	
443	1596 z 296	rubber hose	4	
444	741 z 30	retaining wire	2	
445	651 z 236	wind guiding shield	1	
—	—	screw, button head AM 4 × 10 DIN 86 k (to fasten wind guiding shield to front shield)	3	
—	—	spring washer B 5 DIN 137 k	3	
—	—	washer 4,3 DIN 125 k	2	
—	—	hex. nut M 4 DIN 934 k	3	
—	—	hex. screw M 6 × 15 DIN 933 k (to fasten front shield to foot boards)	4	
—	—	hex. screw M 6 × 12 DIN 933 k (to fasten front shield to foot boards)	2	
—	—	spring washer B 6 DIN 137 k	12	
—	—	hex. nut M 6 DIN 934 k	6	
446	1483 z 68	plate (Bella)	1	
—	—	rivet, button head 1,4 × 4 DIN 660 Alu	5	
447	1487 z 51	decorative plate (flower)	1	
—	173 z 110	spacer tube	1	
—	—	rivet, countersunk head 2 × 10 DIN 661 Alu	1	
—	—	hex. screw M 6 × 25 DIN 933 k (to fasten dashboard cover to front shield)	1	
—	—	washer 6,4 DIN 125 k	1	
—	1241 z 34	ring	1	
—	—	spring washer B 6 DIN 137 k	1	
448	1806 z 104	rubber grommet (to set of cables)	1	
449	1806 z 02	rubber grommet (to set of cables)	1	

www.undappveteranenclub.nl

Illustration 19, Group R: e) Front Cover, Dash Board with Cover

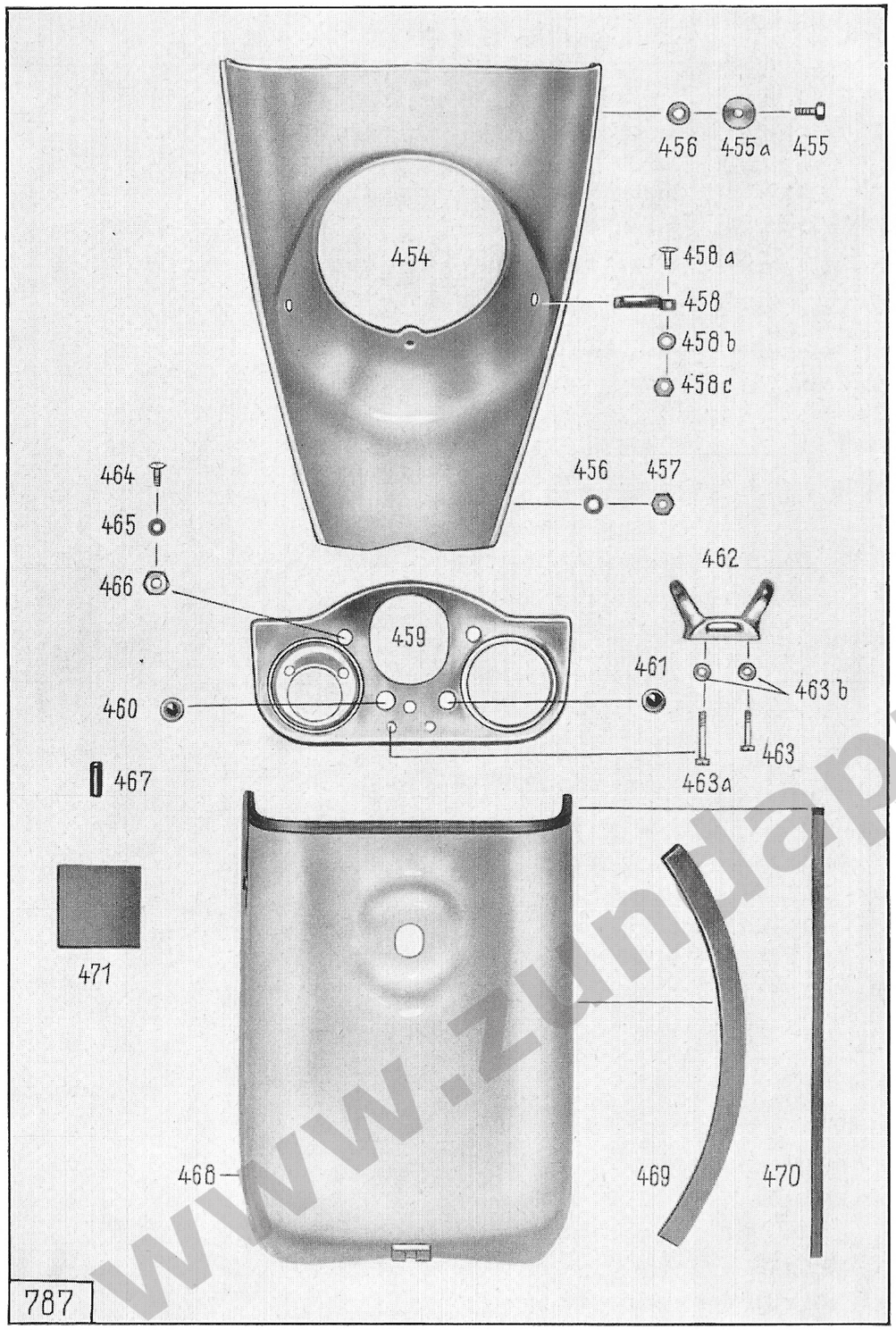

Illustration 19, Group R: e) Front Cover, Dash Board with Cover

Key No.	Spare Part No.	Description	No. of Pieces	Remarks
		Front Cover		
454	650 k 414	front cover	1	please quote colour
455	—	hex. screw M 6 × 15 DIN 933 k (to fasten front cover to front shield)	2	
455a	1301 z 1019	washer	2	
456	—	spring washer B 6 DIN 137 k	4	
—	1301 z 1039	washer	2	
457	—	hex. nut M 6 DIN 934 k	2	
—	1396 z 243	double beading, left-hand	1	
—	1396 z 244	double beading, right-hand	1	
458	631 z 659	cable support	2	
458a	—	screw, button head, AM 4 × 8 DIN 86 k	2	
458b	—	spring washer A 4 DIN 127 k	2	
458c	—	hex. nut M 4 DIN 934 k	2	
		Dash Board		
459	483 z 322	dash board	1	
460	1110 z 19	inspection glass (for charge control lamp)	1	
461	1110 z 20	inspection glass (for idle control lamp)	1	
462	1113 z 3	eyelet (for a strap, etc.)	1	
463	—	cylindrical screw AM 5 × 25 DIN 84 k (to fasten eyelet to dash board)	1	
463a	—	cylindrical screw AM 5 × 35 DIN 84 k (to fasten eyelet as well as holder for control lamps within dash board)	1	
463b	—	spring washer B 5 DIN 137 k	2	
464	—	screw, countersunk raised head AM 6 × 12 DIN 91 crp (to fasten dashboard to front shield)	3	
465	—	shake-proof washer J 6,4 DIN 6797 k	3	
466	—	hex. nut M 6 DIN 934 k	3	
467	1596 z 418	profile rubber (piece of a hose) for dashboard	2	
468	650 z 384	cover (for dashboard)	1	please quote colour
—	1110 z 19	inspection glass (for flashlight)	1	
469	1396 z 240	profile rubber	2	please quote colour
470	1396 z 239	profile rubber	1	
471	1146 z 94	rubber plate	2	
		(For electric parts see under headlight)		

www.zundappveteranenclub.nl

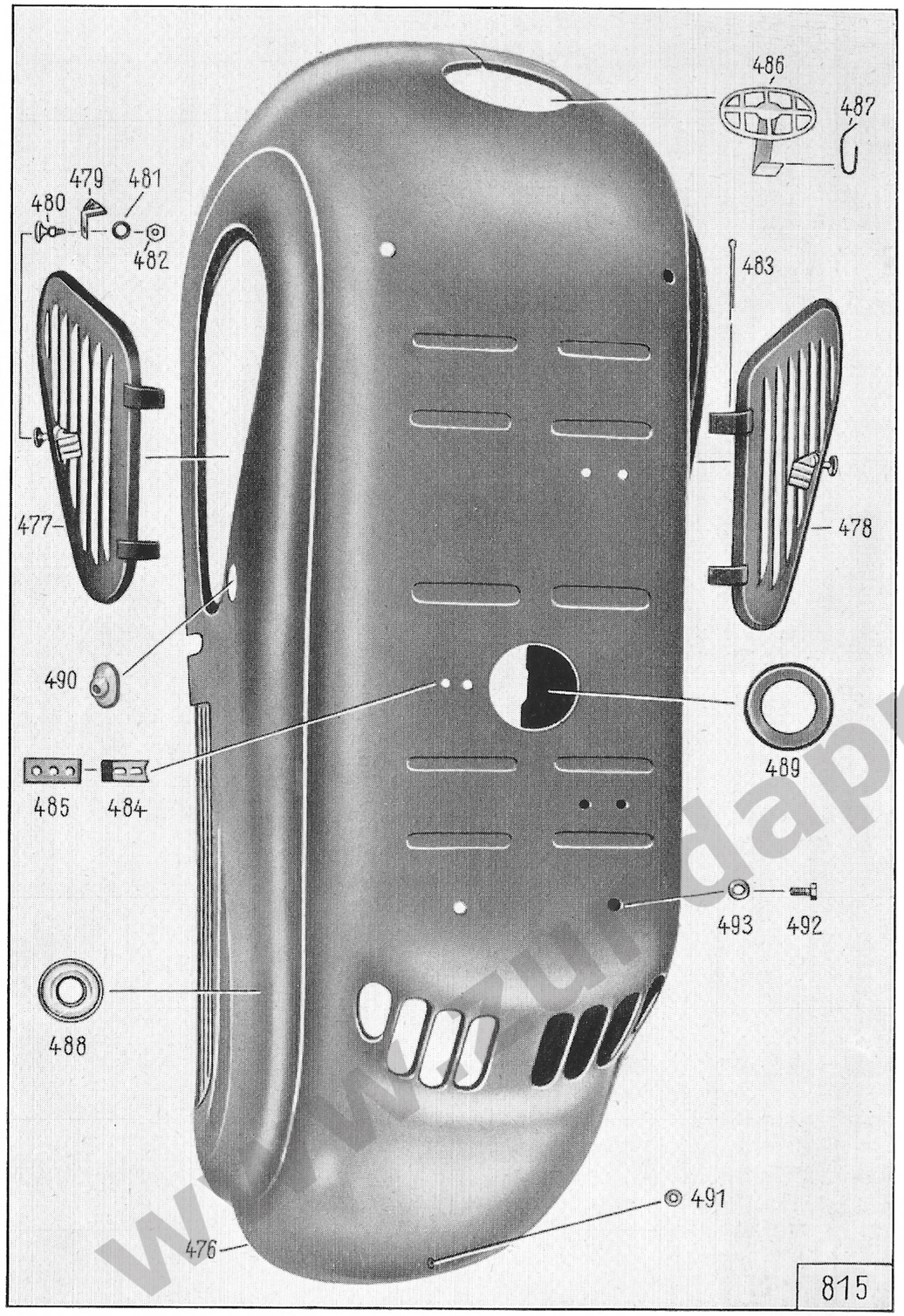

Key No.	Spare Part No.	Description	No. of Pieces	Remarks
		Rear Body		
476	650 z 460	rear body	1	please quote colour
477	650 k 438	left flap with lock	1	
478	650 z 394	right flap with lock	1	
479	331 z 326	lock spring	2	
480	593 z 103	lock button	2	
481	—	spring washer B 6 DIN 137 k	2	
482	—	hex. nut M 6 DIN 934 k	2	
483	—	split pin 4 × 60 DIN 94 k (to fasten flaps to body)	4	
—	321 z 609	pressure spring	2	
484	2051 z 553	locking angle (to dual seat)	1	
485	1141 z 2130	supporting plate	1	
—	—	hex. screw M 6 × 12 DIN 933 k (to fasten locking angle to body)	2	
—	—	spring washer B 6 DIN 137 k	2	
—	—	hex. nut M 6 DIN 934 k	2	
486	650 z 379	locking flap (grid)	1	
487	331 z 331	laminated spring	1	
488	1243 z 10	protective ring	4	
489	616 z 254	rubber grommet (for sealing fuel tank)	1	
490	616 z 244	rubber grommet (to extension for fuel tap)	1	
491	1806 z 106	rubber grommet (to cable passage)	1	
492	—	hex. screw M 8 × 18 DIN 933 crp (to fasten rear body to frame)	4	
493	—	spring washer B 8 DIN 137 k	4	
—	1281 z 396	washer (to fixation in the fore-part)	2	
—	1281 z 397	washer (to fixation in the rear part)	2	

www.vuldappveteranenclub.nl

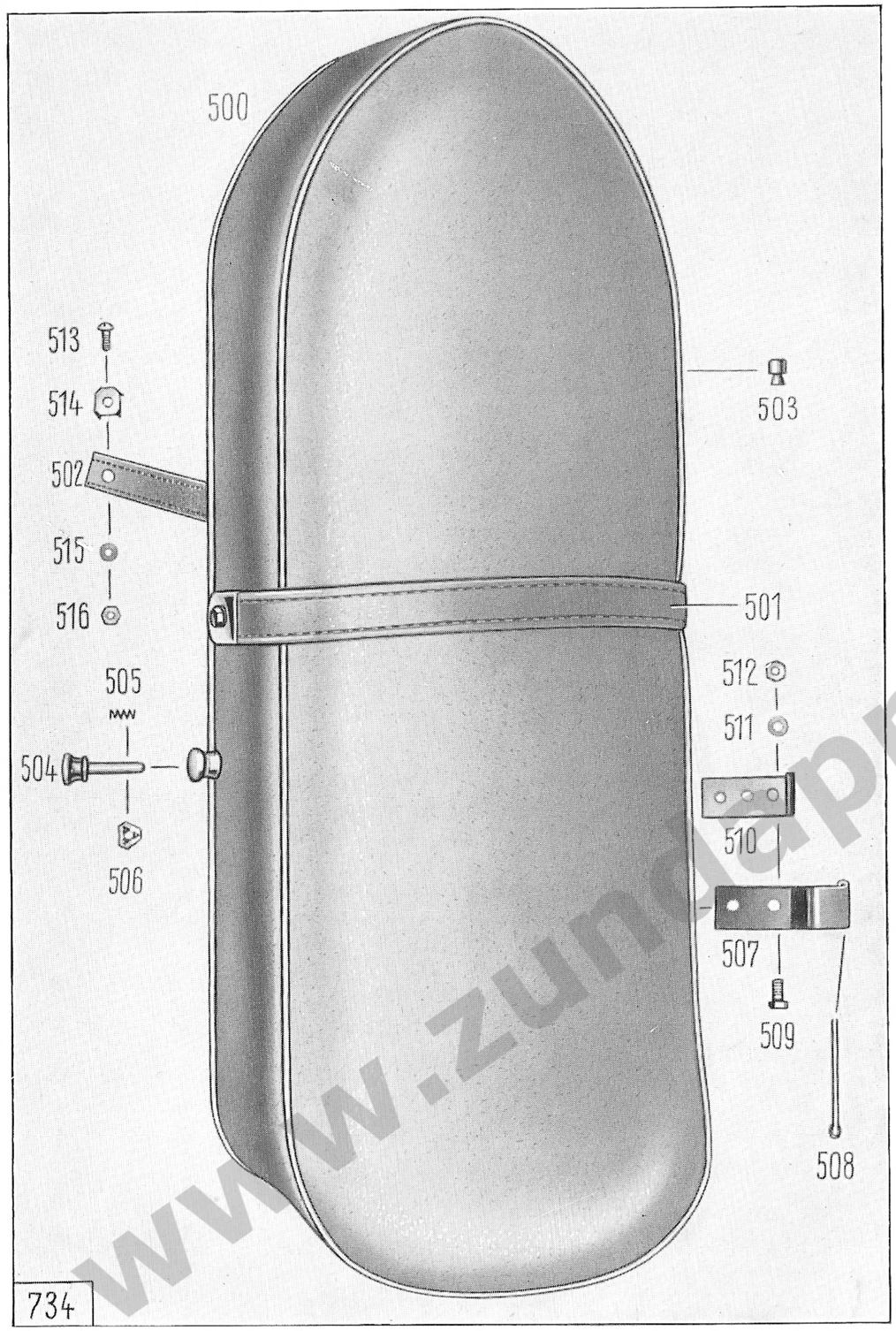

Key No.	Spare Part No.	Description	No. of Pieces	Remarks
		Dual Seat		
500	6330 k 43	dual seat complete	1	please quote colour
—	6346 z 11	foam rubber cushion	1	
—	6340 z 78	dual seat cover	1	please quote colour
—	—	screw, countersunk raised head S 3,5 × 9,5 DIN 7973 k (to fasten dual seat cover)	14	
—	—	screw, countersunk raised head S 3,5 × 13 DIN 7973 k (to fasten dual seat cover)	2	
—	1284 z 15	washer	12	
—	1147 z 806	covering plate	4	
—	—	spring washer A 5 DIN 137	4	
501	2360 k 1	holding strap	1	please quote colour
—	1143 z 105	holding plate	2	
—	1141 z 2143	clamping plate	2	
—	—	hex. screw M 6 × 20 DIN 933 crp (to fasten holding strap to frame of dual seat)	2	
—	—	spring washer A 6 DIN 137 k	2	
502	2360 k 2	retaining strap	1	please quote colour
503	1126 z 1	supporting bolt	4	
504	590 z 109	lock button	1	
505	321 z 549	spring	1	
506	1251 z 258	triangle circlip D 6	1	
507	1151 z 206	joining band	2	
508	—	split pin 4 × 60 DIN 94 k	2	
509	—	hex. screw M 6 × 12 DIN 933 k (to fasten dual seat to rear body)	4	
510	1141 z 2130	supporting plate	2	
511	—	spring washer B 6 DIN 137 k	4	
512	—	hex. nut M 6 DIN 934 k	4	
513	—	screw, button head M 5 × 12 DIN 86 k (to fasten retaining strap to rear body)	1	
514	1141 z 2143	clamping plate	1	
515	—	washer 5,3 DIN 125 k	1	
516	—	hex. nut M 5 DIN 934 k	1	

www.zundappveteranenclub.nl

Illustration 22, Group R: f) Fuel Tank and Fuel Pipes

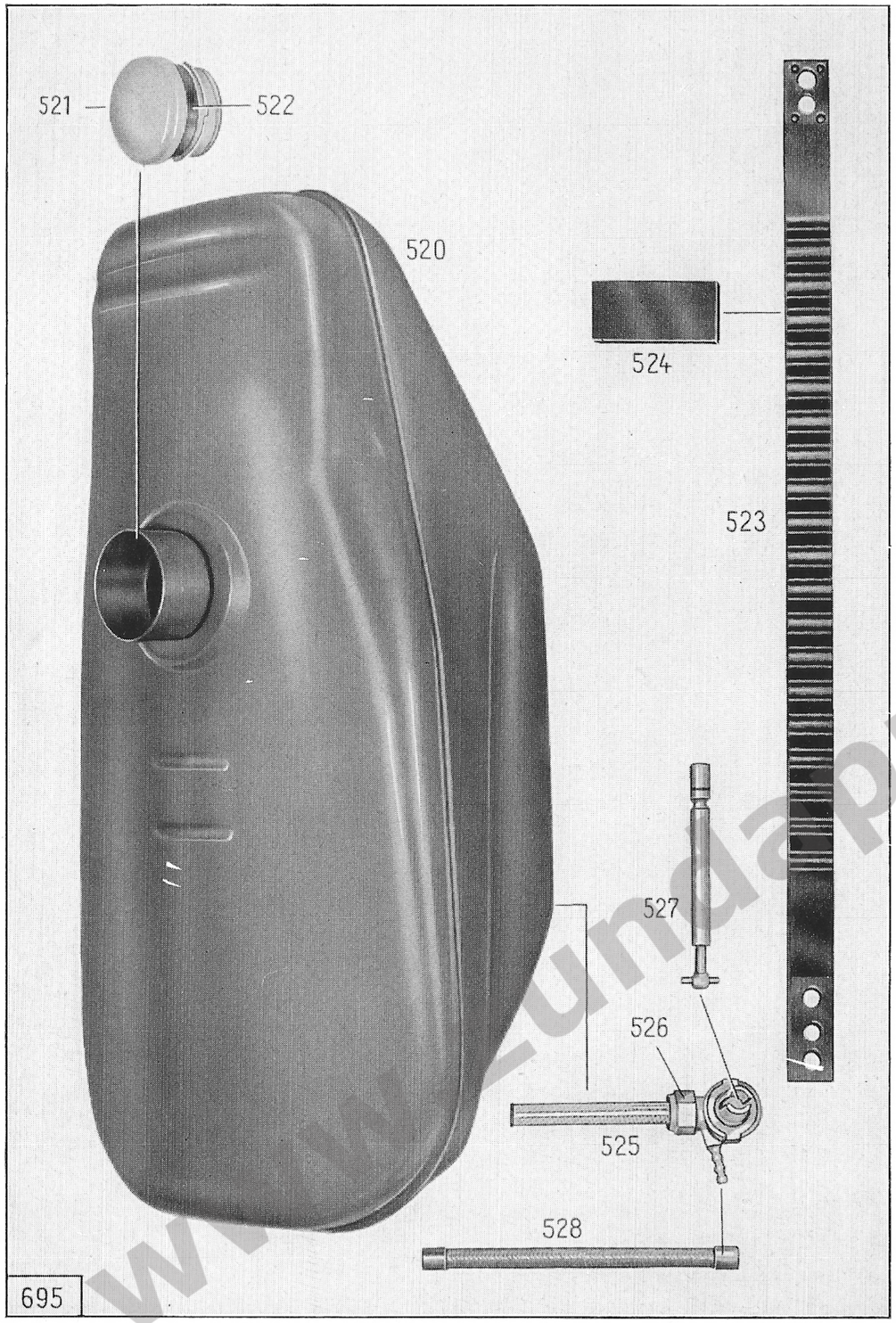

Illustration 22, Group R: f) Fuel Tank and Fuel Pipes

Key No.	Spare Part No.	Description	No. of Pieces	Remarks
		Fuel Tank		
520	6230 z 135-7	fuel tank	1	
521	1850 z 103-0	filler cap	1	
522	1236 z 342	rubber ring (for filler cap)	1	
—	—	split pin 1,5 × 12 DIN 94 k	1	
—	1146 z 78	felt piece (to fuel tank)	1	
523	1390 z 116	elastic clamp (to fasten fuel tank to frame)	1	
524	1146 z 58	support (below elastic clamp)	4	
525	6010 z 162	fuel tap	1	
526	1001 z 55	nut	1	
527	120 z 211	extension (to fuel tap)	1	
528	1590 z 58	fuel hose	1	

www.zundappveteranenclub.nl

Illustration 23, Group R: h) Exhaust Set

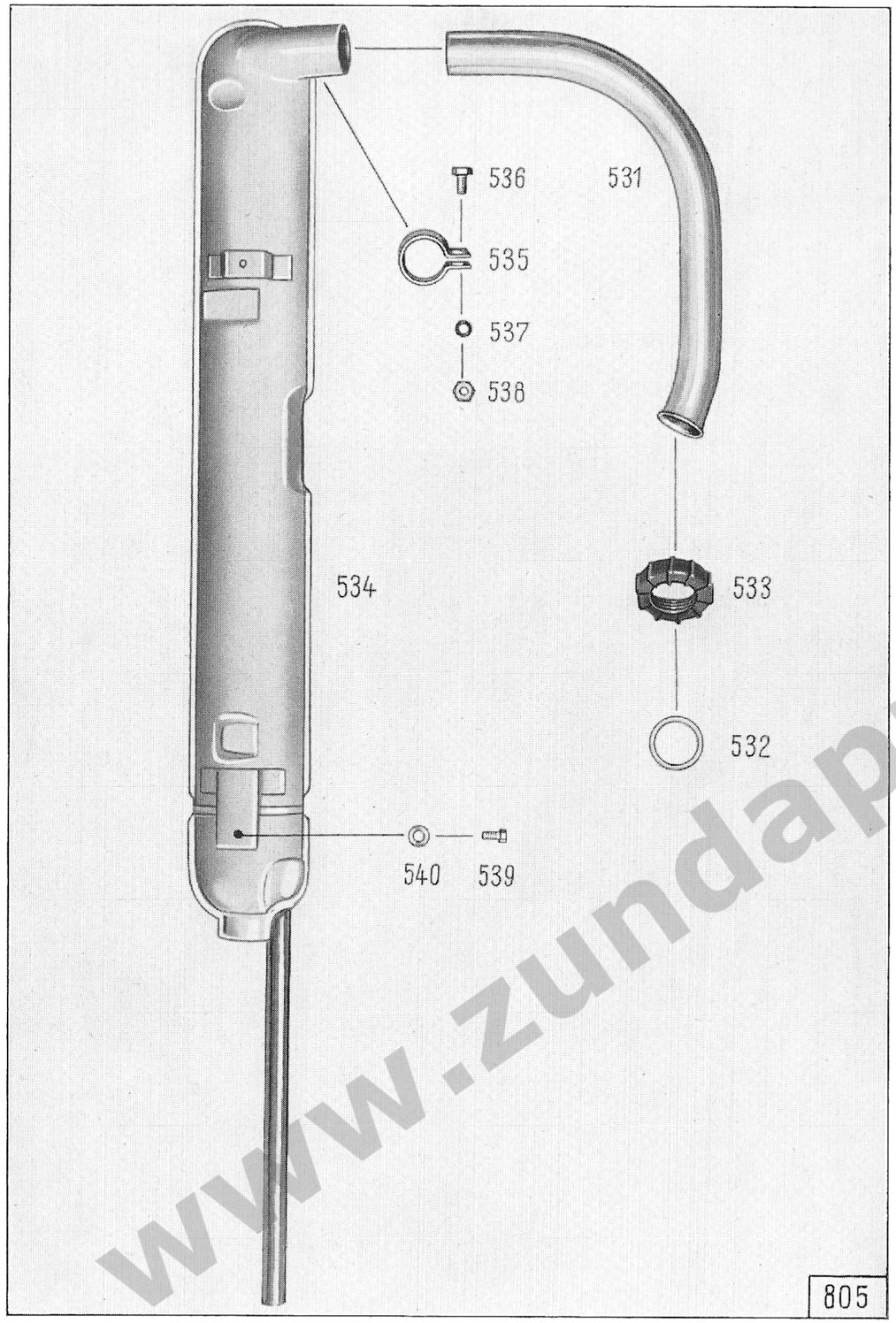

Illustration 23, Group R: h) Exhaust Set

Key No.	Spare Part No.	Description	No. of Pieces	Remarks
		Exhaust Set		
531	1351 z 201	exhaust pipe	1	
532	1239 z 1	packing washer	2	
533	1011 z 12	exhaust nut	1	
534	6030 z 334	silencer	1	
—	2271 k 27	silencer — end piece	1	
535	1441 z 01	clamp (to fasten silencer to exhaust pipe)	1	
536	—	hex. screw M 8 × 15 DIN 933 k	1	
537	—	spring washer A 8 DIN 127 k	1	
538	—	hex. nut M 8 DIN 934 k	1	
539	—	hex. screw M 6 × 12 DIN 933 k (to fasten silencer to left foot board)	2	
540	—	spring washer B 6 DIN 137 k	2	

www.zundappveteranenclub.nl

Illustration 24, Group R: i) Front Swinging Arm Suspension

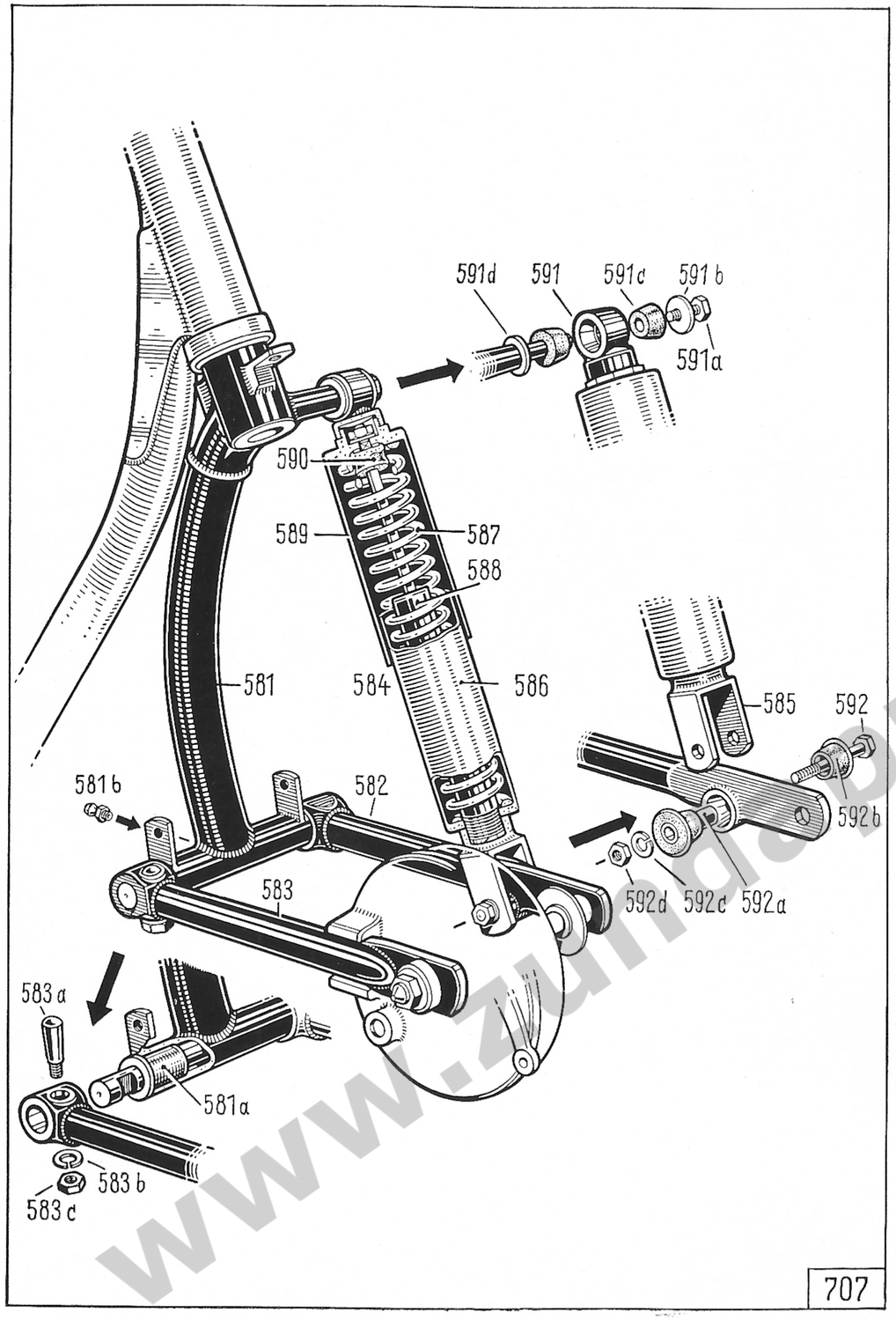

Illustration 24, Group R: i) Front Swinging Arm Suspension

Key No.	Spare Part No.	Description	No. of Pieces	Remarks
		Front Swinging Arm Suspension		
—	6810 k 230	front swinging arm suspension complete	1	please quote colour
581	710 z 253	swinging fork	1	
581a	184 z 535	bushing (in bearing tube)	2	
—	—	pin 10 × 40 DIN 1472	1	
—	1871 z 170	fork race (on swinging fork, at bottom)	1	
—	1301 z 07	washer	1	
581b	—	grease nipple D 6 DIN 71412	1	
—	—	packing washer A 6 × 10 DIN 7603 Alu	1	
582	710 k 241	front left swinging arm with shaft	1	please quote colour
583	710 z 217	front right swinging arm	1	
583a	121 z 1085	fixing bolt (to fix swinging arm to shaft)	1	
583b	—	spring washer A 12 DIN 127 k	1	
583c	—	hex. nut M 12 × 1,5 DIN 936 k	1	
—	1870 z 52	fork race (on swinging fork, at top)	1	
—	1236 z 336	packing washer	1	
—	—	splined nut M 30 × 1 DIN 70852 k	1	
584	6350 z 118	spring unit complete, with hydraulic shock absorber	1	
585	550 z 103	bar head, lower	1	
—	—	spring washer B 16 DIN 127 k	1	
586	170 z 216	protective sleeve, inner	1	
—	1127 z 5	spacer bolt	6	
587	321 z 582	pressure spring	1	
588	6350 z 120	hydraulic shock absorber (brand Boge)	1	
589	173 z 114	protective sleeve, outer	1	
590	616 z 243	rubber damper	1	
—	1301 z 667	washer	1	
—	—	washer 8,4 DIN 125 k	1	
—	—	hex. nut M 8 DIN 934 k	1	
591	553 z 106	bar head, upper	1	
—	—	pin, button head 3 × 8 DIN 1476	1	
591a	—	hex. screw M 8 × 12 DIN 933 k (for fixing spring unit to swinging fork, upper side)	1	
591b	1301 z 35	washer	1	
591c	176 z 41	rubber bushing	2	
591d	—	washer 17 DIN 433 k	1	

www.zundapveteranenclub.nl

www.zundappveteranenclub.nl

Illustration 24, Group R: i) Front Swinging Arm Suspension

Key No.	Spare Part No.	Description	No. of Pieces	Remarks
592	—	hex. screw M 8 × 50 DIN 931 k (for fixing spring unit to swinging fork, lower side)	1	
592a	1331 z 851	spacer tube	1	
592b	176 z 40	rubber bushing	2	
—	—	washer 8,4 DIN 125 k	1	
592c	—	spring washer A 8 DIN 127 k	1	
592d	—	hex. nut M 8 DIN 934 k	1	

Illustration 25, Group R: k) Handlebar and Handlevers with Cables

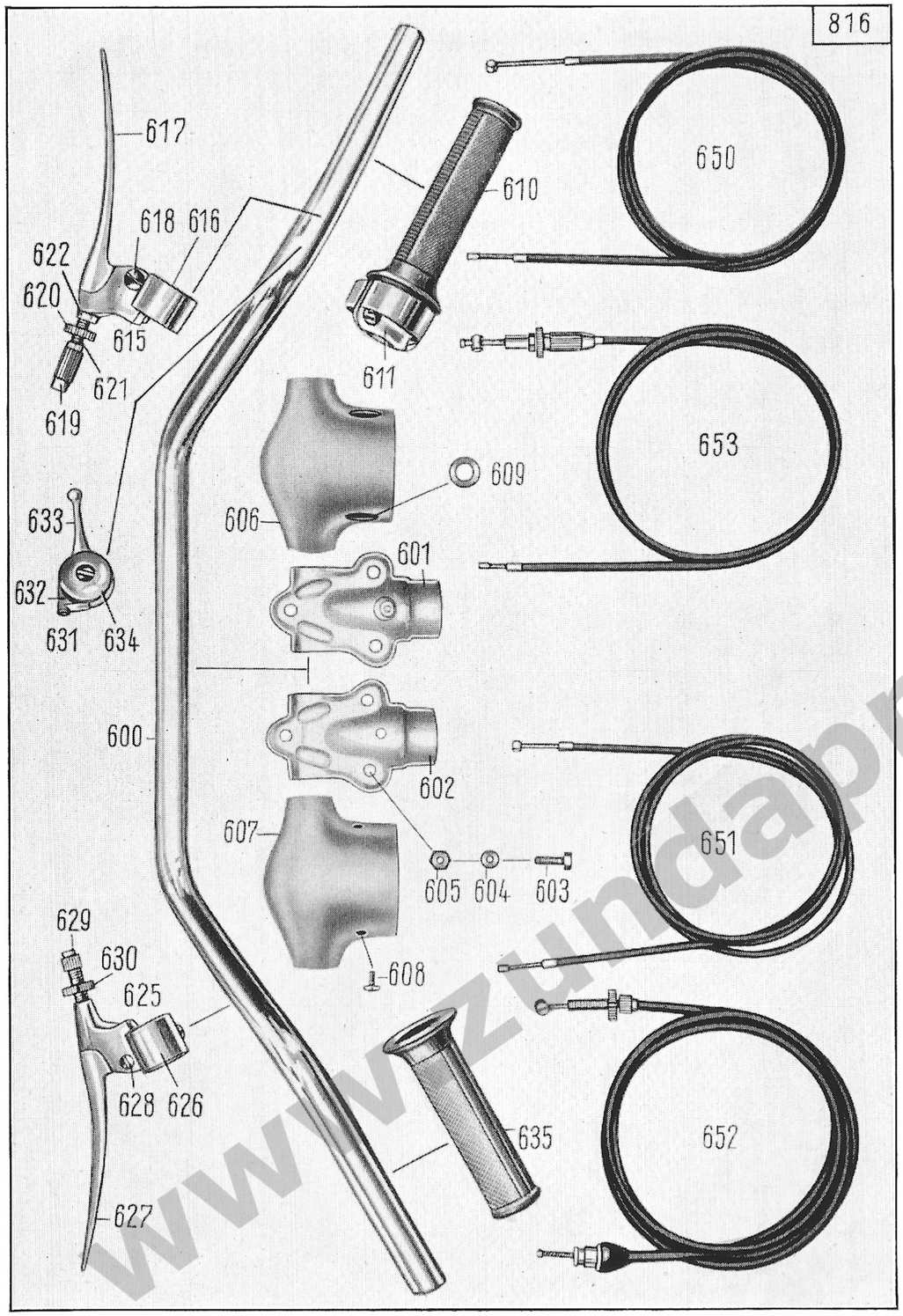

Illustration 25, Group R: k) Handlebar and Handlevers with Cables

Key No.	Spare Part No.	Description	No. of Pieces	Remarks
		Handlebar		
600	1370 z 253	handlebar	1	
601	821 z 13	handlebar clamp	1	
602	820 z 11	handlebar clamp	1	
603	—	hex. screw M 8 × 28 DIN 931 k	3	
604	—	spring washer B 8 DIN 137 k	3	
605	—	hex. nut M 8 DIN 934 k	3	
606	650 z 411	front cover	1	
607	651 z 283	rear cover	1	
608	—	screw, contersunk raised head, AM 4 × 5 DIN 91 crp	3	
609	616 z 229	grommet	2	
		Hand Levers		
610	170 k 217	throttle twist grip	1	
611	2250 k 8-0	housing (upper and lower part)	1	
—	2251 k 13-0	brake spring	1	
—	2251 k 14-0	adjusting screw	1	
—	2251 k 12-3	screw, fillister head	2	
—	2251 k 15-0	cable support	1	
—	2250 k 6-0	grip tube with segment ring	1	
—	2256 k 6-0	twist grip cover	1	
—	2251 k 10-0	washer	1	
615	670 z 210	brake lever with cable adjustment	1	
616	2263 k 22-0	joining piece	1	
—	2261 k 4-3	screw, fillister head	1	
617	2263 k 23-0	brake lever	1	
618	2261 k 5-4	lever screw	1	
—	—	hex. nut M 6 DIN 934 crp	1	
619	2263 k 24-0	adjusting nut	1	
620	2263 k 25-0	knurled edge nut	1	
621	2261 k 24-0	bolt (with thread)	1	
622	2261 k 25-3	hex. nut	1	

www.zundappveteranenclub.nl

Illustration 25, Group R: k) Handlebar and Handlevers with Cables

Key No.	Spare Part No.	Description	No. of Pieces	Remarks
625	670 z 207	clutch lever with cable adjustment	1	
626	2263 k 1-0	joining piece	1	
—	2261 k 4-3	screw, fillister head (for joining piece)	1	
627	2263 k 2-0	clutch lever	1	
628	2261 k 7-3	lever screw	1	
—	—	hex. nut M 5 DIN 934 crp	1	
629	2261 k 1-3	adjusting screw	1	
630	2263 k 7-0	knurled edge nut	1	
631	670 z 231	starter lever	1	
632	2263 k 35-4	housing	1	
633	2263 k 34-4	lever	1	
—	2261 k 31-0	thrust washer	1	
—	2261 k 30-0	spring washer	1	
634	2263 k 33-4	covering washer	1	
—	—	screw, countersunk raised head M 6 × 22 DIN 88 crp	1	
635	616 z 232	grip	1	colour of rubber = grey
		Cables		
650	6290 k 476	cable for throttle twist grip	1	
—	—	nipple C DIN 71988	1	
—	144 k 28	nipple	1	
—	—	sleeve C 2,5 DIN 71987	2	
651	6290 z 477	cable for starter lever	1	
—	—	nipple C DIN 71988	2	
—	—	sleeve C 2,5 DIN 71987	2	
652	6290 z 478	cable for clutch	1	
—	144 z 25	nipple seat	1	
—	1064 z 101	nipple	1	
—	1064 z 102	nipple	1	
—	173 z 109	sleeve	1	
—	1806 z 08	rubber grommet	1	
—	616 z 236	rubber cover	1	
—	2261 k 1-3	adjusting screw	1	
—	2263 k 7-0	knurled edge nut	1	
653	6290 k 475	cable for front brake	1	
—	144 z 04	cable end	1	
—	—	nipple seat A DIN 71988	1	
—	—	nipple B 2,3 DIN 71988	1	
—	—	sleeve C 3 DIN 71987	2	
—	551 z 108	yoke	1	
—	131 z 516	bolt (to yoke)	1	
—	—	split pin 1,5 × 15 DIN 94 k	1	
—	171 z 442	sleeve	1	
—	616 z 263	rubber cover	1	

www.zundappveteranenclub.nl

Illustration 26: Group B: a) Brakes, Handbrake

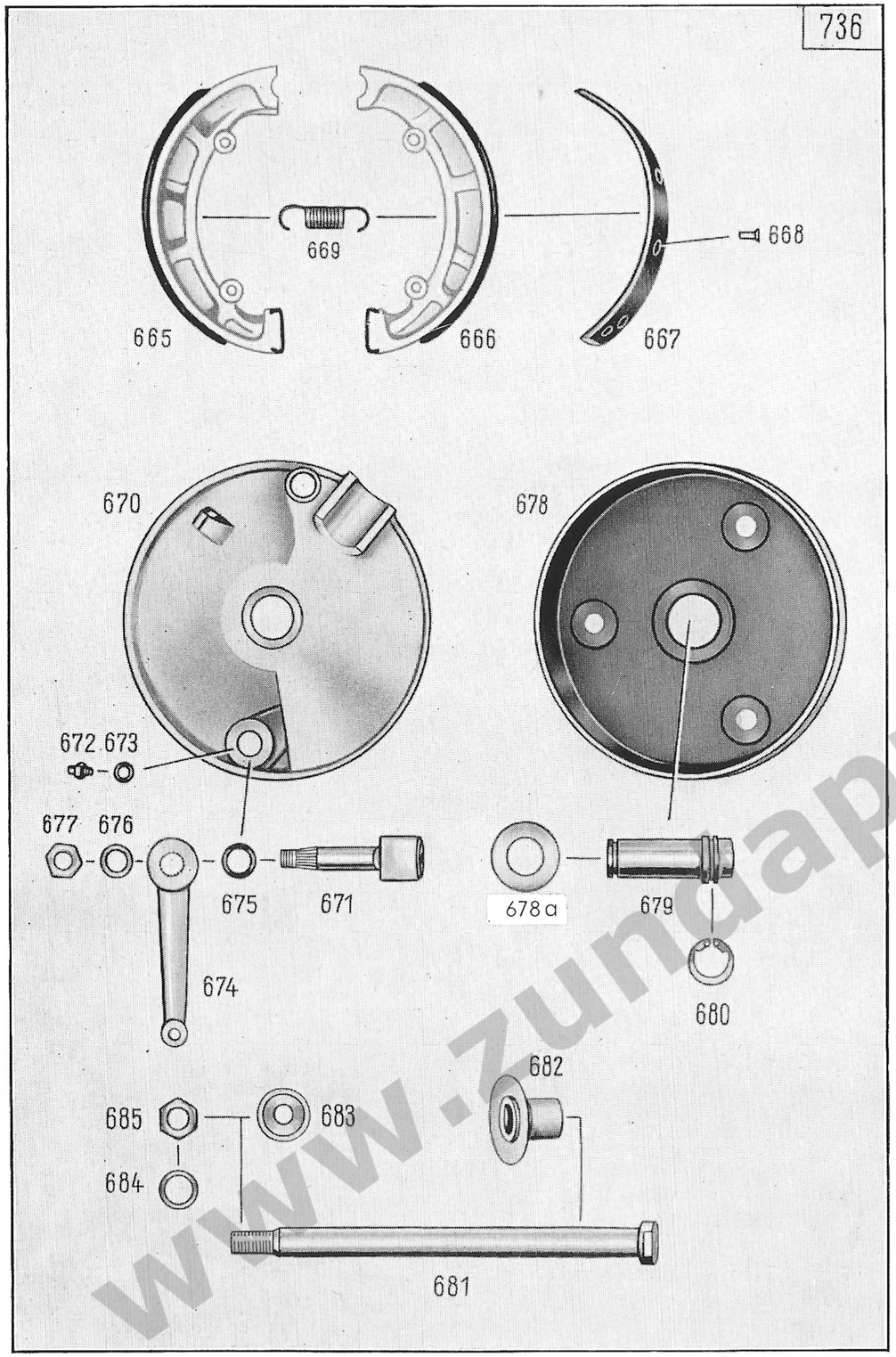

Illustration 26, Group B: a) Brakes, Handbrake

Key No.	Spare Part No.	Description	No. of Pieces	Remarks
		Handbrake		
665	20 z 108	brake shoe with lining, left-hand	1	lining fixed with paste
666	20 z 109	brake shoe with lining, right-hand	1	
667	49 z 12	brake lining	2	to be riveted
668	1044 z 10	cylindrical rivet	12	
669	321 z 310	return spring (betw. brake shoes)	2	
670	230 z 233	brake cover	1	
671	1100 z 110	brake cam with bracket	1	
672	1080 z 1	grease nipple	1	
673	—	packing washer A 6 × 10 DIN 7603	1	
674	671 z 324	brake lever	1	
675	1236 z 06	rubber sleeve (betw. brake lever and brake cover)	1	
676	—	spring washer A 10 DIN 127 k	1	
677	—	hex. nut M 10 DIN 934 k	1	
678	1791 z 203	brake drum	1	
678a	1301 z 640	washer (between brake cover and brake drum)	1	
679	121 z 1109	bearing bushing (to brake drum)..	1	
680	1251 k 260	V-circlip	1	
—	1301 z 1030	washer	1	
—	—	circlip 18 × 1,2 DIN 471 k	1	
681	131 z 537	front wheel axle	1	
682	1330 z 193	spacer tube 23,7 mm length		at option
—	1330 z 194	spacer tube 24,0 mm length		
—	1330 z 195	spacer tube 24,3 mm length		
—	—	washer 17 DIN 125 k	1	
683	1781 z 155	pressure plate	1	
684	—	spring washer B 12 DIN 137 k	1	
685	—	hex. nut M 12 × 1,5 DIN 934 k	1	

www.zundappveteranenclub.nl

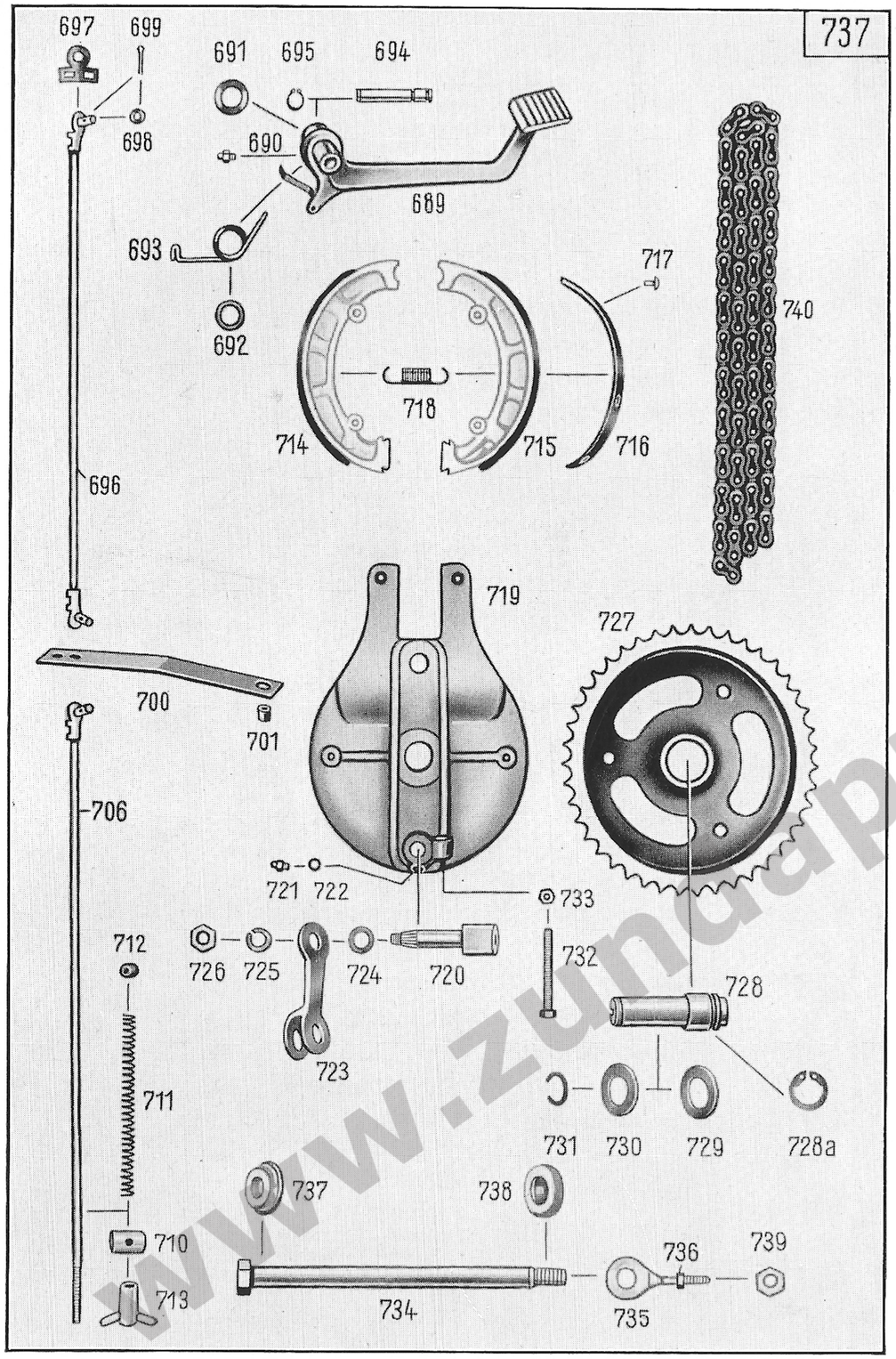

Key No.	Spare Part No.	Description	No. of Pieces	Remarks
		Footbrake		
689	700 k 112	footbrake lever	1	
690	1080 z 1	grease nipple	1	
—	—	packing washer A 6 × 10 DIN 7603	1	
691	1236 z 324	packing washer	1	
692	1236 z 325	packing washer	1	
693	321 z 556	return spring	1	
694	121 z 1141	bearing bolt to foot brake lever	1	
695	—	circlip 10 × 1 DIN 471	2	
696	1650 k 122	front brake rod with stop clamp	1	
697	1111 z 01	stop clamp	2	
698	—	washer 6,4 DIN 125 k	2	
699	—	split pin 2 × 12 DIN 94 (to fasten brake rod to foot brake lever)	2	
700	671 z 343	footbrake spacer lever	1	
701	1241 z 368	spacer ring	1	
—	—	hex. screw M 7 × 20 DIN 933 k (to fasten footbrake spacer lever to left-h. brace)	1	
—	—	spring washer B 10 DIN 137 k	2	
—	1301 z 1028	washer	1	
—	—	hex. nut M 7 DIN 934 k	1	
706	1650 k 123	rear brake rod, with stop clamp	1	
697	1111 z 01	stop clamp	1	
698	—	washer 6,4 DIN 125 k	1	
699	—	split pin 2 × 12 DIN 94 k	1	
710	121 z 1046	brake lever bolt (to rear wheel brake lever)	1	
711	321 z 88	spring	1	
712	1241 z 34	ring	1	
713	1023 z 16	toggle nut (to fasten brake rod to rear wheel brake lever)	1	
714	20 z 108	brake shoe with lining, left-hand	1	lining fixed with paste
715	20 z 109	brake shoe with lining, right-hand	1	lining fixed with paste
716	49 z 12	brake lining	2	to be riveted in place

www.zundappveteranenclub.nl

Illustration 27, Group B: a) Brakes, Footbrake

Key No.	Spare Part No.	Description	No. of Pieces	Remarks
717	1044 z 10	cylindrical rivet	12	
718	321 z 310	spring (betw. brake shoes)	2	
719	230 z 226	brake cover	1	
720	1100 z 8	brake cam with bracket	1	
721	1080 z 1	grease nipple	1	
722	—	packing washer A 6 × 10 DIN 7603	1	
723	671 z 011	brake lever	1	
724	1236 z 06	rubber sleeve (betw. brake lever and brake cover)	1	
725	—	spring washer A 10 DIN 127 k	1	
726	—	hex. nut M 10 DIN 934 k	1	
727	1791 z 213	brake drum (43 teeth)	1	
728	121 z 1115	bearing bushing (to brake drum)	1	
728a	1251 k 261	circlip	1	
729	1301 z 640	washer (betw. brake cover and brake drum)	1	
730	1301 z 671	shim 20,3 × 35 × 1,8	as required	betw. swinging fork and snap ring
—	1301 z 672	shim 20,3 × 35 × 2,0		
—	1301 z 673	shim 20,3 × 35 × 2,2		
731	1251 z 29	snap ring (on bearing bushing)	1	
732	—	hex. screw M 6 × 55 DIN 933 k (in brake cover for chain tightening)	1	
733	—	hex. nut M 6 DIN 934 k	1	
734	131 z 510	rear wheel axle	1	
735	1111 z 209	chain tightener	1	
736	—	hex. nut M 6 DIN 934 k	2	
737	1231 z 309	clamping ring	1	
738	1243 z 7	spacer ring	1	
739	—	hex. nut M 12 × 1,5 DIN 934 k (to rear wheel axle)	1	
740	—	roller chain 1 × 12,7 × 7,75 DIN 8180, 96 links incl. lock	1	
—	—	cranked link 1 D 12,7 × 7,75 DIN 8180	1	
—	—	lock 1 E 12,7 × 7,75 DIN 8180	2	

www.zundappveteranenclub.nl

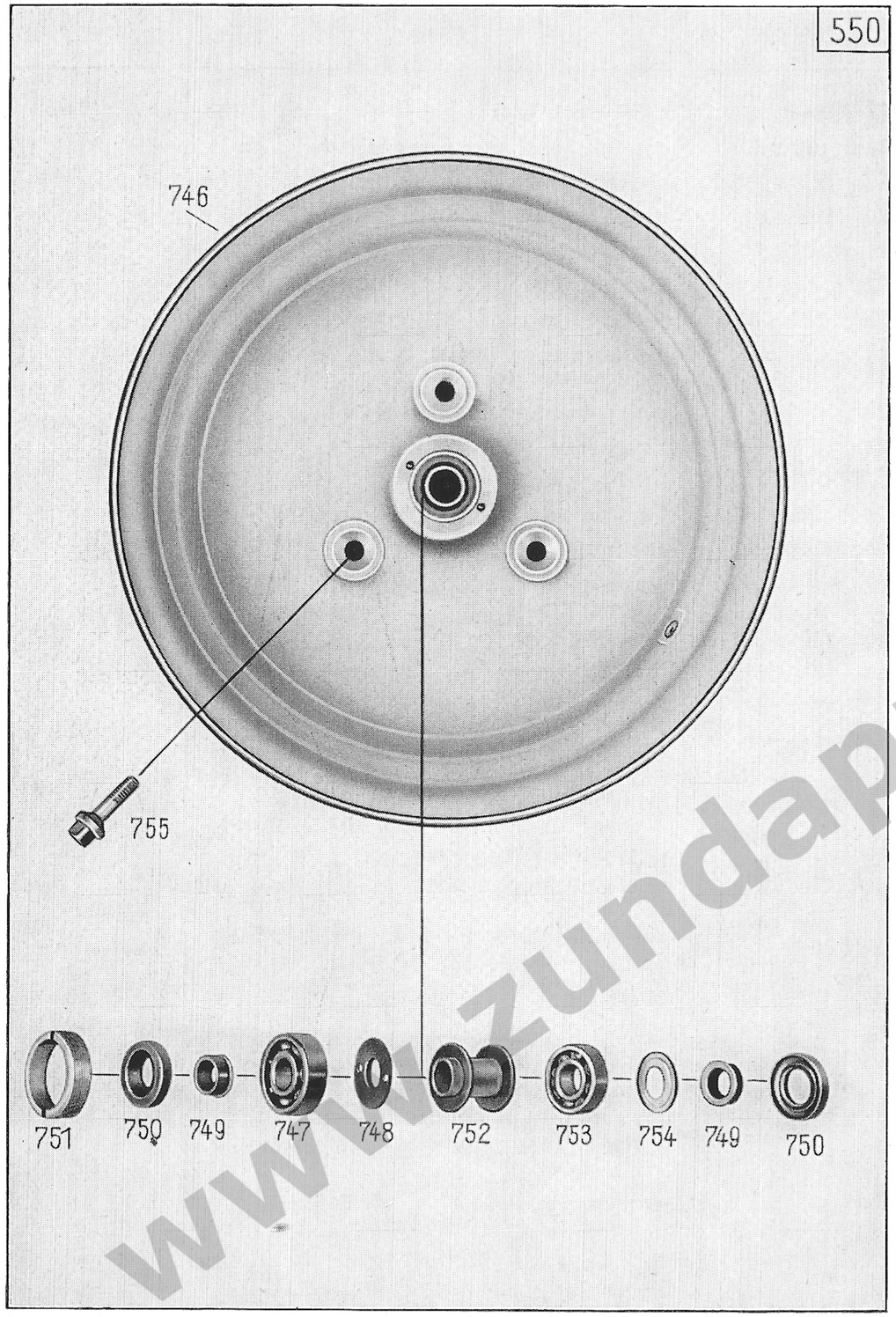

Key No.	Spare Part No.	Description	No. of Pieces	Remarks
		Wheels		
746	6660 z 87	wheel without tyre	2	
747	—	ball bearing 6302 DIN 625	2	
748	1301 z 641	shim 15,2 × 36,6 × 0,1	as required	betw. ball bearing and spacer bushing
—	1301 z 642	shim 15,2 × 36,6 × 0,2		
—	1301 z 643	shim 15,2 × 36,6 × 0,3		
749	171 z 412	spacer bushing	4	
750	—	radial gasket (oil seal) with dust protective lip A 20 × 35 × 7 DIN 6503	4	
751	1011 z 84	ring nut	2	
752	1330 z 166	spacer tube	2	
753	—	ball bearing 6202 DIN 625	2	
754	1231 z 305	ring	2	
755	1551 z 411	square screw (for fixing wheels) ..	6	

www.zundappveteranenclub.nl

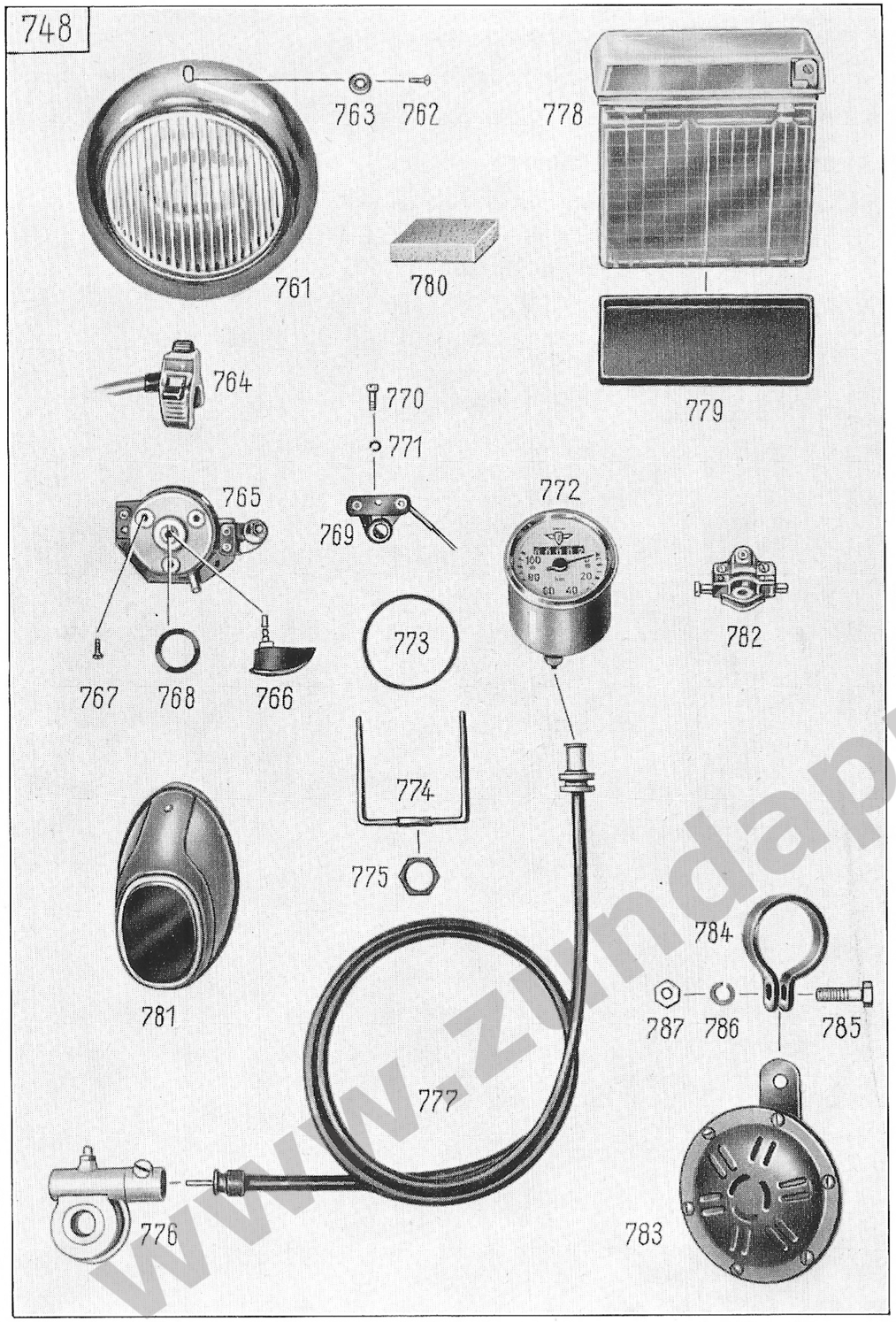

Key No.	Spare Part No.	Description	No. of Pieces	Remarks
		Headlight		
761	6090 z 103	headlight (with parking light bulb)	1	
—	2310 k 28-0	reflector	1	
—	2311 k 31-4	rim	1	
—	2317 k 6-0	headlight glass	1	
—	2316 k 6-0	rubber ring (for headlight glass) ..	1	
—	2310 k 29-6	holder (to Bilux bulb)	1	
—	2311 k 32-0	retaining spring (to holder)	1	
—	—	Bilux bulb B 6 V 35/35 W DIN 72601	1	Osram 7323
—	—	parking light bulb H 6 V 2 W DIN 72601	1	Osram 7323
762	—	screw, countersunk raised head AM 4 × 10 DIN 91 crp (to fasten headlight to front cover)	3	
763	1281 z 365	washer	3	
764	6160 z 191	dip switch with set of cables	1	
—	2340 k 7-0	set of cables (4 lines)	1	
—	2346 k 1	rubber grommet	1	
		within the dashboard:		
765	6160 z 183	ignition-light switch with key	1	
766	2310 z 50	ignition key	1	
767	—	screw, countersunk raised head AM 4 × 12 DIN 91 crp (to fasten switch to dashboard)	2	
768	1236 z 102	rubber washer	1	
—	2310 k 2	bulb for charge control light 6 V 2 W	1	Osram 3765
769	6160 z 156	bracket (for charge control and idle control light)	2	
770	—	cylindrical screw M 4 × 10 DIN 84 k (to fasten bracket to dashboard)	1	
771	—	spring washer A 4 DIN 137	2	
—	2310 k 2	bulb for idle control light 6 V 2 W	1	Osram 3765

www.zundappveteranenclub.nl

Illustration 29, Group E: a) Electrical Equipment, Speedometer, Battery, Taillight

Key No.	Spare Part No.	Description	No. of Pieces	Remarks
		Speedometer		
772	6770 z 58	speedometer indicating miles	1	
773	2426 k 2-0	rubber ring	1	
774	2421 k 7	retaining clip	1	
775	2421 k 6-2	hex. nut (to retaining clip)	1	
—	2424 k 1-0	bulb bracket	1	
—	—	bulb J 6 V 1,2 W DIN 72601	1	Osram 3799
776	6780 z 102	drive (onto rear wheel)	1	
777	6790 z 108	cable for drive	1	
—	616 z 247	rubber grommet (for clutch lever)	1	
—	1806 z 108	rubber grommet (for speedometer drive)	1	
		Battery		
778	6060 z 101	battery 6 V 8 Ah	1	
779	1146 k 60	battery base	1	
780	1146 z 98	rubber plate	1	
		Taillight		
781	6110 z 46	brake-tail-number plate light	1	
—	2320 k 6-8	cap	1	
—	2320 k 3-0	glass (to cap)	1	
—	—	bulb L 6 V 5 W DIN 72601 (as tail-light bulb)	1	Osram 6416

Illustration 29, Group E: a) Electrical Equipment, Brakelight Pressure Switch, Horn

Key No.	Spare Part No.	Description	No. of Pieces	Remarks
—	—	bulb K 6 V 15 W DIN 72601 (as brakelight bulb)	1	Osram 6452
—	1146 z 84	supporting plate	1	
—	—	screw, button head AM 5 × 15 DIN 86 k	1	
—	—	screw, button head AM 5 × 20 DIN 86 k	1	
—	—	washer (fan-shaped) J 5,3 DIN 6798	2	
—	—	hex. nut M 5 DIN 934 k	2	
		Brakelight Pressure Switch		
782	6160 z 158	brakelight pressure switch	1	
—	1141 z 2100	fixing plate	1	
—	—	screw, button head AM 4 × 10 DIN 86 k (to fasten brakelight pressure switch to fixing plate)	2	
—	—	spring washer A 4 DIN 137 k	2	
		Horn		
783	6130 z 24	horn	1	
784	1441 z 315	clamp	1	
785	—	hex. screw M 8 × 25 DIN 931 k (to fasten clamp to frame)	1	
786	—	spring washer A 8 DIN 127	1	
—	—	washer 8,4 DIN 125 k	2	
787	—	hex. nut M 8 DIN 934 k	1	

www.zundappveteranenclub.nl

Illustration 29, Group E: a) Electrical Equipment, Electric Conducts

Key No.	Spare Part No.	Description	No. of Pieces	Remarks
		Electric Conducts		
—	760 k 281	set of cables, complete	1	
		(Please order cables and hoses by meters)		
		Conducts B 1,5 DIN 72 551:		
—	—	generator-lighting switch 1090 mm .	1	red
—	—	generator-lighting switch 1090 mm .	1	blue
—	—	generator-charge control light 1090 mm	1	green
—	—	idle control-housing cover 1540 mm	1	yellow/green
—	—	lighting switch-taillight 1065 mm	1	black/white
—	—	horn-lighting switch 590 mm	2	yellow
—	—	speedometer-lighting switch 200mm	1	red/yellow
—	—	control light-idle indicator 80 mm..	1	blue
—	—	control light-lighting switch 120 mm	1	blue
—	—	headlight-lighting switch 460 mm ..	1	blue/red
—	—	headlight-lighting switch 460 mm ..	1	red/green
—	—	battery-lighting switch 150 mm	1	red
—	760 k 225	battery-earth 200 mm	1	black
—	—	lighting switch - fuse 70 mm	1	yellow
—	—	fuse - brakelight pressure switch 820 mm	1	yellow
—	—	brakelight pressure switch - double plug 570 mm	1	yellow
—	—	lighting switch - double plug 1040 mm	1	black/white
—	—	double plug - tail/brake/number plate/light, 1085 mm, two-lines ..	1	black
—	—	rubber hose 16 × 14 × 1030 mm ..	1	
—	—	rubber hose 8 × 6 × 100 mm ..	1	
—	—	insulating hose B 4 × 5 × 220 sw DIN 40621	2	
—	—	insulating hose B 4 × 5 × 400 sw DIN 40621	1	
—	—	insulating hose B 12 × 13,6 × 230 sw DIN 40621	1	
—	174 z 17	contact sleeve	1	within conduct to taillight
—	1064 z 104	connecting nipple	1	within conduct to taillight
—	1806 z 01	connection protector	1	
—	—	cable shoe A 5 × 3 DIN 46211	2	
—	144 z 27	cable shoe	1	
—	144 z 32	cable shoe	1	
—	6160 z 192	half of double plug (plug)	1	
—	6160 z 193	half of double plug (bushing) ..	1	
—	6160 k 168	plug	1	
—	—	fuse 8 DIN 72581	1	to tie set of cables and Bowden cables
—	1396 z 51	rubber band	5	to tie set of cables and Bowden cables

www.zundappveteranenclub.nl

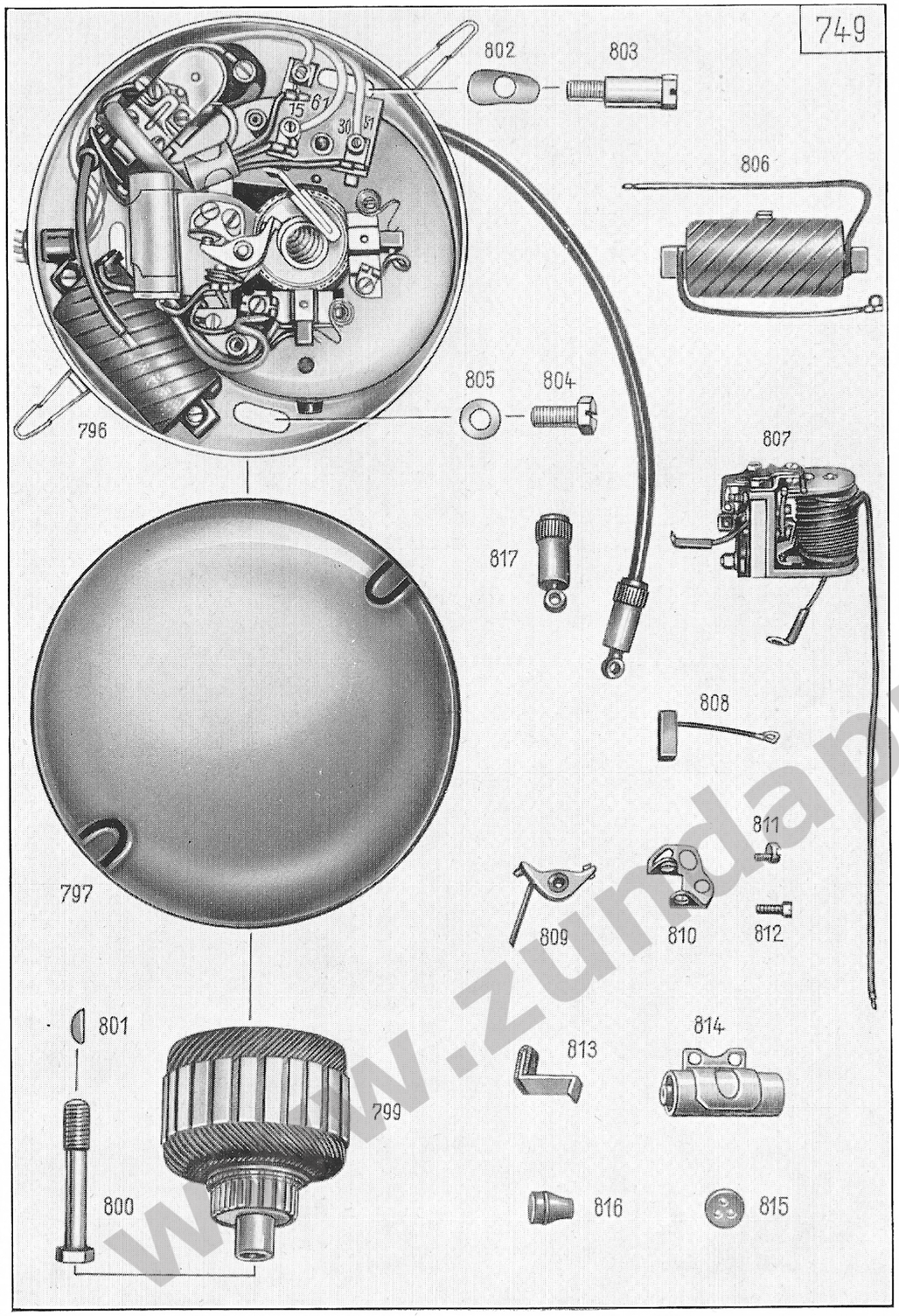

Key No.	Spare Part No.	Description	No. of Pieces	Remarks
		Starter Generator		
796	6070 z 207	starter generator model Noris MLZ 60/6/1600/1 R	1	
797	2290 k 53-8	protective cover	1	
—	2291 k 32-0	clamping spring	2	
—	1236 z 340	rubber ring (to protective cover)	1	
799	2290 k 39-0	armature MLZ 1003/10 Z	1	
800	2291 k 19-2	hex. screw (to fasten armature) MLZ 150/1 x	1	
801	—	woodruff key 4 × 5 DIN 6888 (to fasten armature on crankshaft)	1	
802	2291 k 2-2	joint plate	1	
803	1551 z 029	screw	1	
804	1551 z 031	hex. screw	1	
805	—	washer 8,4 DIN 125	1	
806	2290 k 22-0	ignition coil without ignition cable MLZ 129/2 Z	1	
807	2290 k 40-0	regulator SSM 22/60/3 B	1	
808	2290 k 3-0	carbon brush with cable SDZ 6/30 536/1 Z	2	
809	2290 k 30-6	contact breaker arm with contact ULZ 115/1 Z	1	
810	2290 k 31-0	contact bracket ULZ 126/2 Z	1	
811	2291 k 26-3	excentric screw ULZ 107/1 x	1	
812	—	cylindrical screw M 4 × 6 DIN 84	1	
813	2290 k 6-0	laminated spring with felt SDZ 6/30 521/1 Z	1	
814	2290 k 7-3	condenser SLZ 136/1 Z	1	
815	2296 k 5-0	rubber grommet (to lighting cable) SDZ 828/1 x	1	
816	2296 k 6-0	rubber grommet (to ignition cable) MLZ 255/1 x	1	
—	—	ignition cable (please quote length when ordering) 7 ⌀ × 0.82 mm² DIN 72561	1	
817	6080 z 102	spark plug cover Beru L 4 Z	1	
—	—	insulating hose B 8 × 9,4 × 40 sw DIN 40621	1	
—	—	spark plug with gasket 14 DIN 72502	1	Bosch W 225 T 11 or Beru 225/14 u2

www.zundappveteranenclub.nl

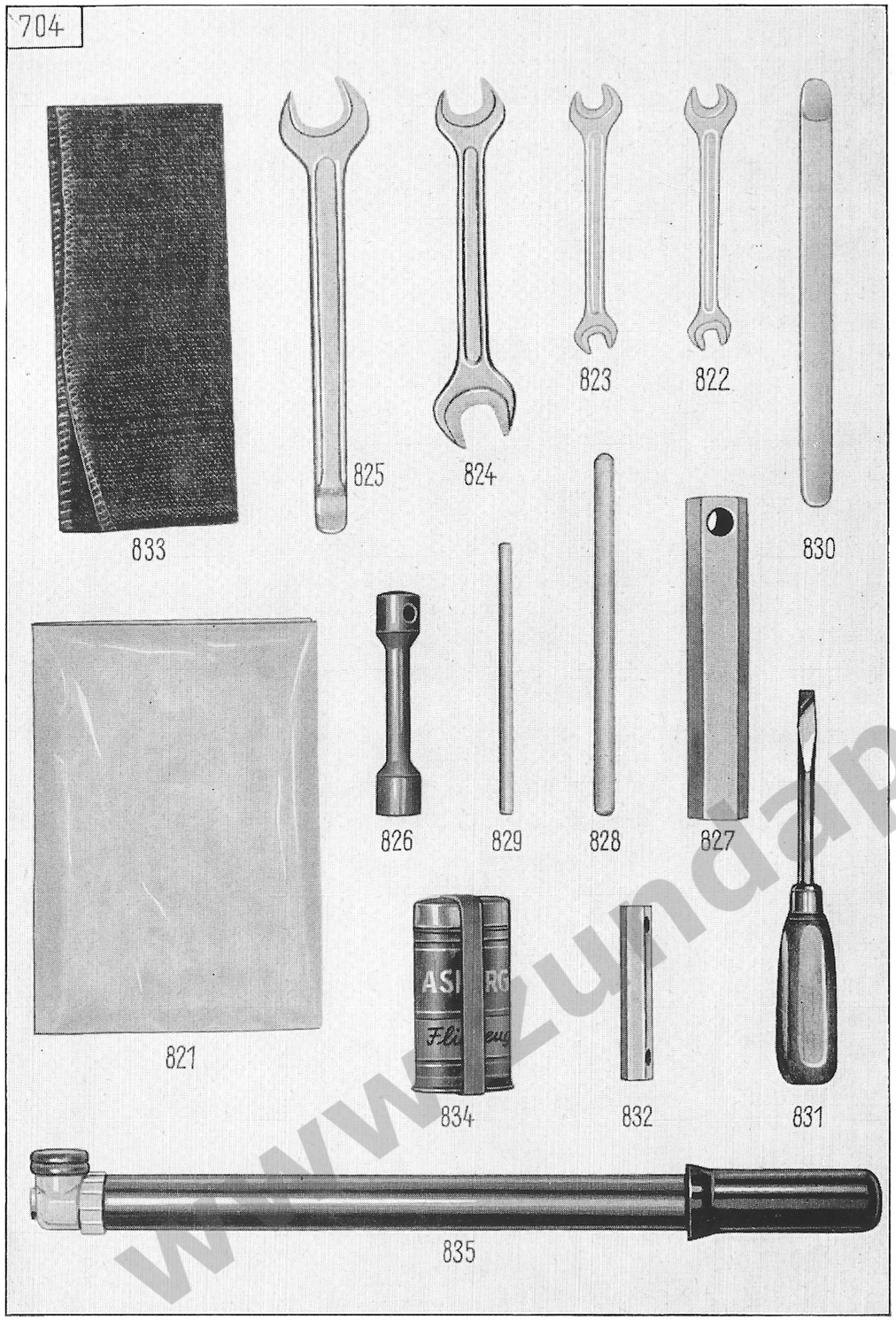

Key No.	Spare Part No.	Description	No. of Pieces	Remarks
		Tools		
—	6890 k 44	set of tools with bag	1	
821	6040 z 23	bag for set of tools	1	
822	—	double end spanner 7 × 9 mm DIN 895	1	
823	—	double end spanner 8 × 10 mm DIN 895	1	
824	—	double end spanner 14 × 17 mm DIN 895	1	
825	2011 k 104	one end spanner 19 mm with tyre lever	1	
826	2021 z 51	square socket wrench	1	
827	2021 z 56	socket wrench (to spark plug)	1	
828	1671 z 02	mandrel 10 mm ⌀	1	
829	2001 z 15	mandrel 7 mm ⌀	1	
830	2001 z 01	tyre lever	1	
831	2009 z 01	screw driver	1	
—	2000 z 24	screw driver	1	
832	2021 z 23	socket wrench (to carburettor)	1	
833	2208 k 11	cleaning cloth	1	
834	6040 k 269	box with rubber repairing material	1	obtainable in the trade
835	6040 k 255	air pump (without hose)	1	
—	1596 z 291	cover (to air pump)	1	

www.zundappveteranenclub.nl

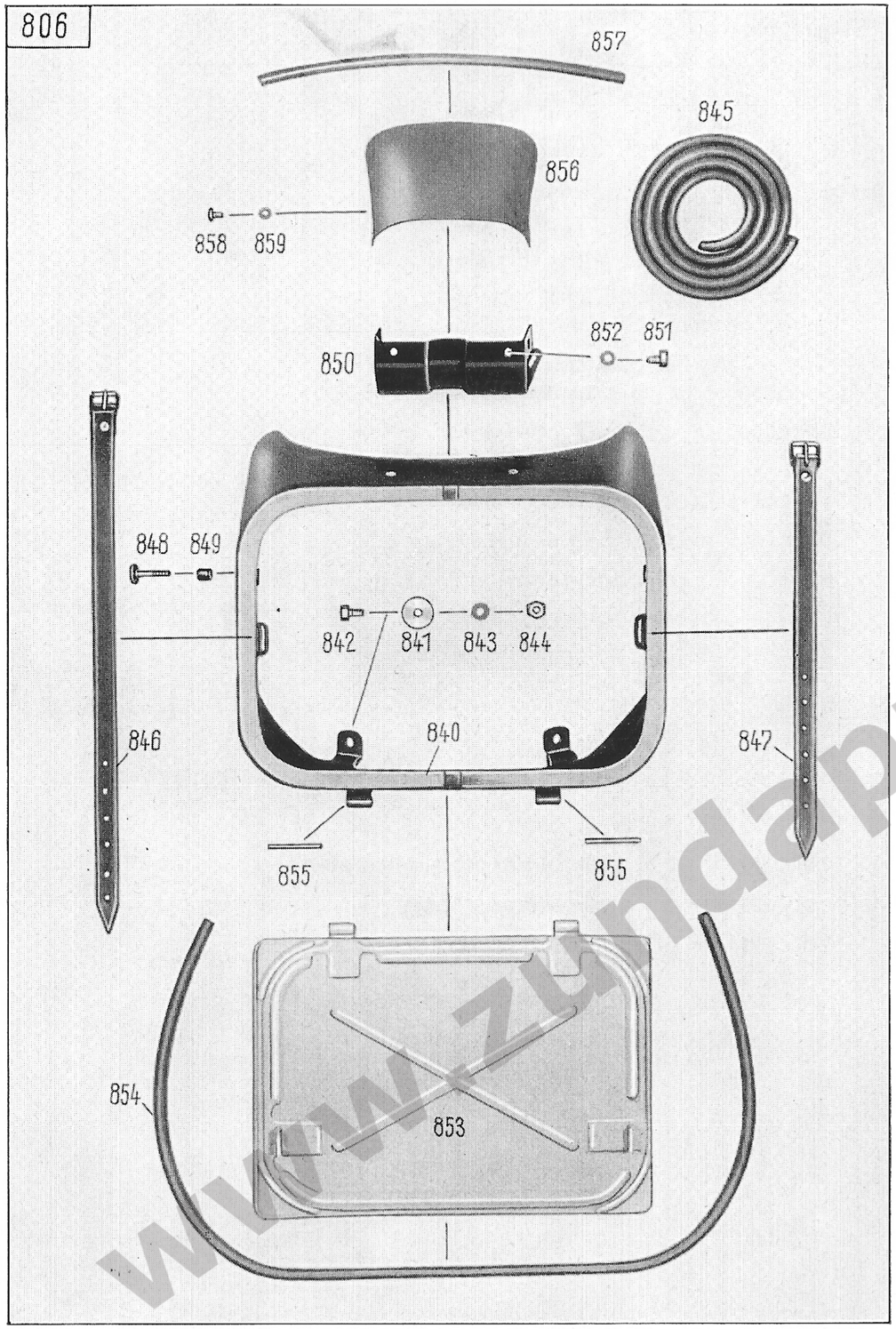

Illustration 32, Group W: b) Toolbox

Key No.	Spare Part No.	Description	No. of Pieces	Remarks
		Toolbox		
840	2190 z 68	toolbox	1	please quote colour
841	1301 z 1019	washer	4	
842	—	hex. screw M 6 × 12 DIN 933 k (to fasten toolbox to rear body)	4	
843	—	spring washer B 6 DIN 137 k	4	
844	—	hex. nut M 6 DIN 934 k	4	
845	1396 z 259	rubber lace (length 1100 mm)	1	
846	1390 z 122	strap (with buckle) for tools	1	
847	1390 z 118	strap (with buckle) for rubber repairing material	1	
848	1541 z 319	slot screw	2	
849	176 z 48	rubber bushing	2	
850	2051 z 606	bracket (to taillight)	1	
851	—	hex. screw M 6 × 6 DIN 933 k (to fasten bracket to toolbox)	2	
852	—	spring washer B 6 DIN 137 k	2	
853	1470 z 13	cover (to toolbox)	1	
854	1396 z 258	rubber lace (length 850 mm)	1	
855	—	riveting pin A 4 h 11 × 38 DIN 7341 Ms (to fasten cover to toolbox)	2	
856	651 z 293	cover plate (to taillight)	1	please quote colour
857	1396 z 260	rubber lace	1	
858	—	screw, button head, AM 4 × 5 DIN 86 crp (to fasten cover plate)	2	
859	—	spring washer A 4 DIN 137 k	2	
—	1471 z 43	number plate	1	
—	—	screw, button head, AM 5 × 12 DIN 86 (to fasten number plate to toolbox)	4	
—	—	spring washer A 5 DIN 127 k	4	
—	—	hex. nut M 5 DIN 934 k	4	

www.zundappveteranenclub.nl

www.zundapp-veteranenclub.nl