ZÜNDAPP
SERVICE

SPARE PARTS LIST

ZÜNDAPP-MOTORCYCLE

250 S SUPER-SABRE

Published in February 1957

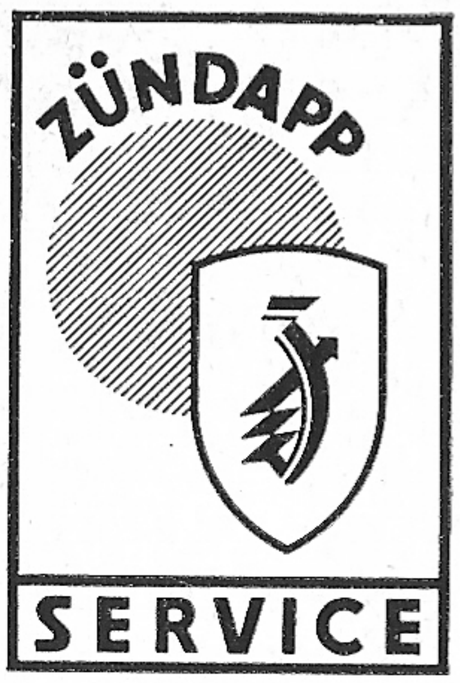

SPARE PARTS LIST

ZÜNDAPP-MOTORCYCLE

250 S SUPER-SABRE

www.zondappveteranenclub.nl

Published in February 1957

Printed in Germany

Contents

		Page	Illustration
Introduction		5	—
Group M:	a) Engine (assembly)	9	1
	b) Housing and cylinder		
	Crankcase	11	2
	Crankcase cover	15	3
	Cylinder and cylinder head	17	4
	c) Drive mechanism		
	Crankshaft, connecting rod, piston	19	5
	f) Carburettor	21	6
	Air cleaner and covering	23	7
	g) Clutch, clutch operating mechanism	25	8
Group G:	c) Shafts and gears		
	Selector shaft	27	9
	Starter shaft	31	10
	d) Footshift mechanism	33	11
Group R:	a) Frame	35	12
	Spring leg and swinging fork	37	13
	b) Dual seat and toolbox	41	14
	d) Mudguards		
	Front and rear mudguard	43	15
	Chaincase	45	16
	f) Fuel tank and pipes	47	17
	h) Exhaust set	49	18
	i) Front fork (assembly)		
	Front fork suspension and fork legs	51	19
	Steering damper	55	20
	k) Handlebar and handlevers with cables	57	21
Group B:	a) Brakes		
	Handbrake	61	22
	Footbrake	63	23
	b) Wheels		
	Front wheel	67	24
	Rear wheel	69	25
Group E:	a) Electrical equipment		
	Headlight, battery, taillight, horn, conducts	73	26
	Battery-lighting-ignition set	77	27
Group W:	Tools	79	28

www.zundappveteranenclub.nl

INTRODUCTION

Please take note that only Genuine Zündapp Spares will be the safeguard for security, claims under guarantee, and will prevent many a damage and loss.

Therefore, do not use parts of another origin but demand only Genuine Zündapp Spares from your Zündapp dealer, for by fitting imitated parts any claim under guarantee will automatically become void.

In order to avoid errors, queries, and incorrect deliveries, please quote with all orders for spare parts:

1. Description and number of the spare part wanted in accordance with this list,
2. Frame number stamped into the rating plate,
3. Modifications made on the vehicle by exchanging spare parts or groups.

In these data cannot be given it will be necessary to send in a pattern labelled with the sender's name and address. These patterns will be returned to the sender only upon request.

Model Order
Re: Frame No. 931 526

1 crankshaft with connecting rod	No. 1950 k 208
1 cylinder	No. 2162 z 213
1 piston	No. 883 z 163
3 piston rings	No. 1262 z 105.

Deliveries of spare parts are only made through our respective representatives.

All illustrations and data in this list are not binding. We reserve the right for alterations without previous notice.

ZÜNDAPP-WERKE G.M.B.H., NÜRNBERG-MÜNCHEN
NÜRNBERG WORKS

www.zundappveteranenclub.nl

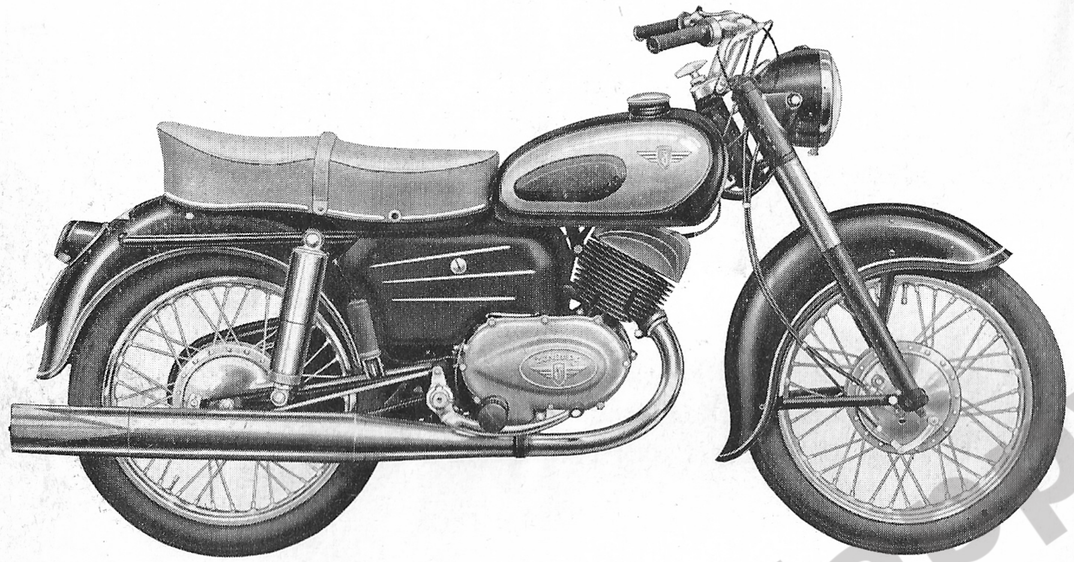

250 S Super-Sabre, right-hand view
beginning with Frame No. 931501

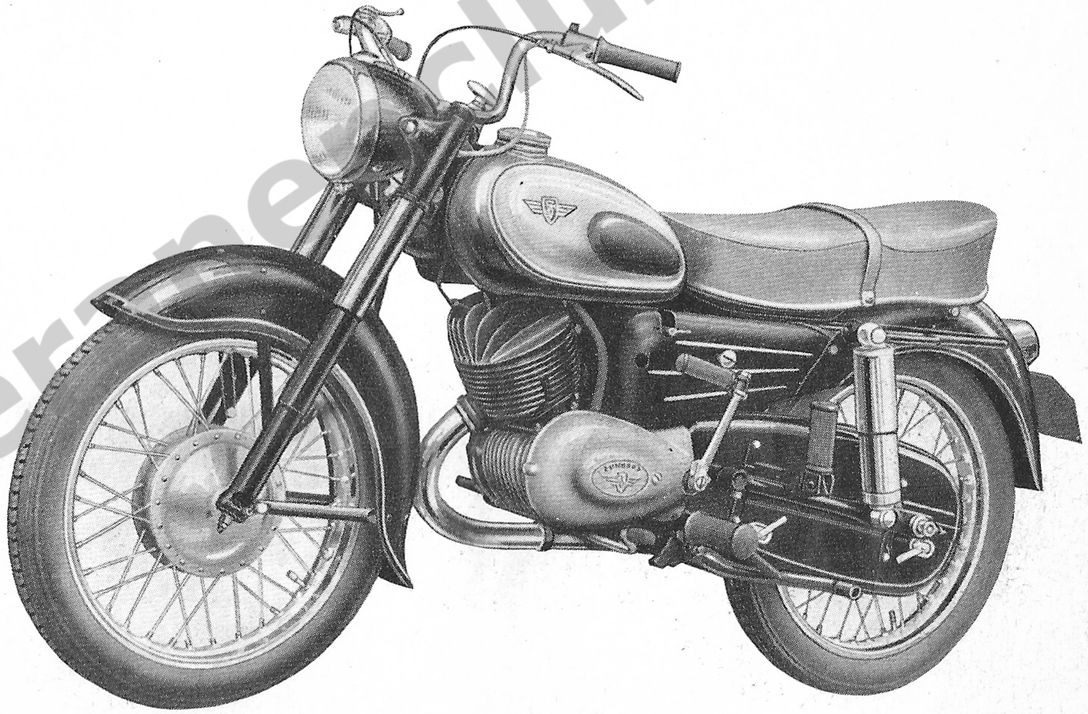

250 S Super-Sabre, left-hand view
beginning with Frame No. 931501

www.zundappveteranenclub.nl

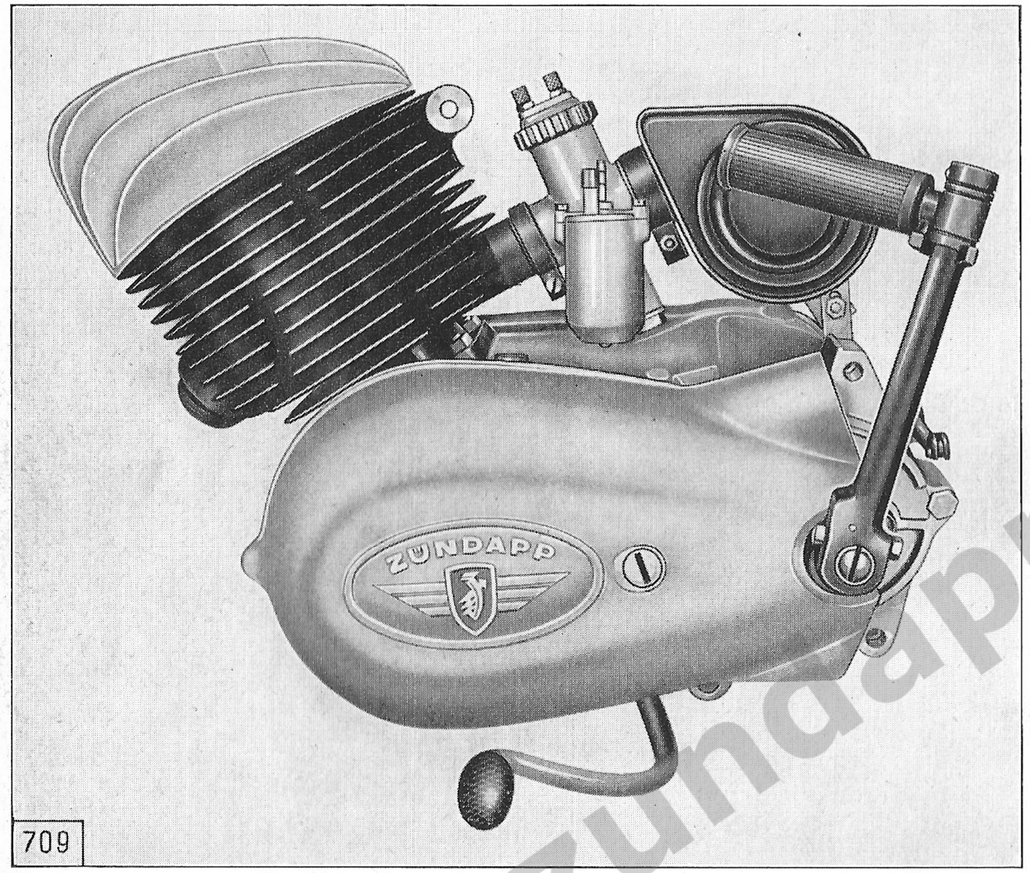

Illustration 1, Group M: a) Engine (assembly)

Key No.	Spare Part No.	Description	No. of Pieces	Remarks
		Engine		
—	6590 k 268-0	Engine complete with generator, carburettor, and starter	1	

www.zundappveteranenclub.nl

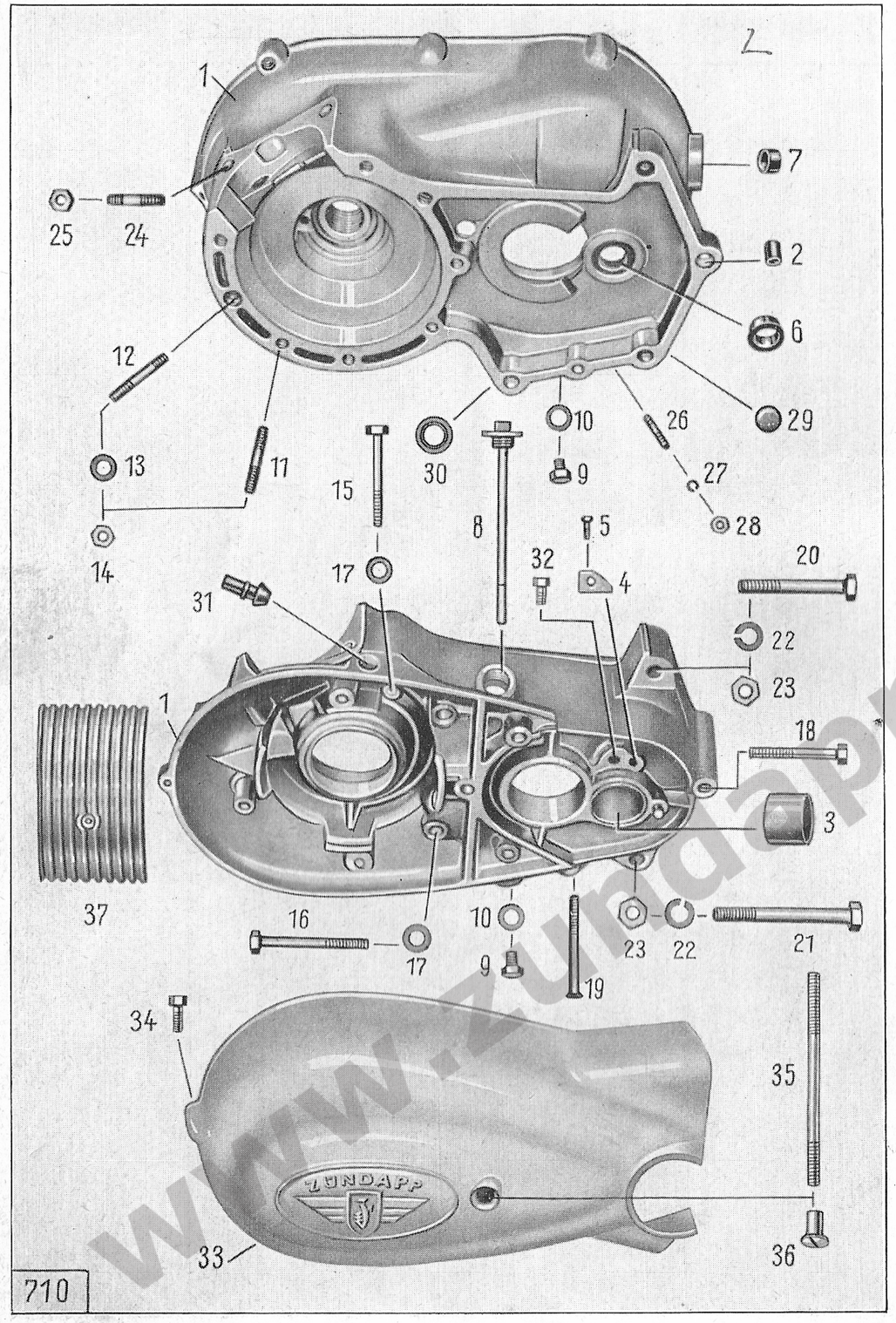

Key No.	Spare Part No.	Description	No. of Pieces	Remarks
		Crankcase		
1	510 k 231-0	crankcase complete	1	
2	181 z 18	dowel bushing (between left and right half of crankcase	2	
3	184 z 501	bearing bushing (to starter shaft, left-hand)	1	
4	1141 z 2151-0	stop (to engaging pin)	1	
5	1041 z 101	rivet	1	
6	184 z 318	bearing bushing (to starter shaft, right-hand)	1	
7	184 z 328	bearing bushing (to clutch pressure bar)	1	
8	1550 z 112-0	oil dip stick (for gearbox)	1	
9	—	hex screw M 8 × 10 DIN 933 k (for oil draining)	2	
10	—	packing washer C 8 × 14 DIN 7603	2	
11	—	stud M 8 × 30 DIN 835 k (to fasten left to right half of crankcase) ..	2	
—	—	hex screw M 8 × 32 DIN 931 k (to fasten left to right half of crankcase)	1	
12	—	stud M 8 × 35 DIN 939 k (to fasten left to right half of crankcase) ..	1	
13	—	spring washer B 8 DIN 137 k	4	
14	—	hex nut M 8 DIN 934 k	4	
15	—	hex screw M 8 × 60 DIN 931 k (to fasten left to right half of crankcase)	1	
16	—	hex screw M 8 × 75 DIN 931 k (to fasten left to right half of crankcase)	2	
17	1303 z 02	shim	3	
18	—	cylindrical screw CM 8 × 75 DIN 84 k (to fasten left to right half of crankcase)	1	
19	—	screw, countersunk raised head M 8 × 65 DIN 91 a (to fasten left to right half of crankcase)	1	
20	—	hex screw M 10 × 70 DIN 931 k (to fasten engine to frame)	1	

www.zundappveteranenclub.nl

Illustration 2, Group M: b) Housing and Cylinder, Crankcase

Key No.	Spare Part No.	Description	No. of Pieces	Remarks
21	—	hex screw M 10 × 90 DIN 931 k (to fasten engine to frame)	2	
22	—	spring washer A 10 DIN 127 k	4	
23	—	hex nut M 10 DIN 934 k	3	
24	1561 z 010	stud (to fasten cylinder)	4	
25	—	hex nut M 8 DIN 934 k)	4	
26	1561 z 107	stud (to fasten gear selector support)	4	
27	—	spring washer A 5 DIN 127 k	4	
28	—	hex nut M 5 DIN 934	4	
29	—	lock washer 16 DIN 470 (to right half of crankcase)	1	
30	—	radial gasket (oil seal) B 14 × 24 × 7 DIN 6503 (to foot-shift shaft)	1	
—	—	stud M 6 × 30 DIN 835 k (to fasten bracket for silencer) ..	2	
—	—	shake-proof (toothed) washer J 6,4 DIN 6797 k	2	
—	—	hex nut M 6 DIN 934 k	2	
31	1806 z 105	rubber grommet (to generator cable) in left half of crankcase ..	1	
32	—	hex screw M 8 × 1 × 20 DIN 960 k (stop screw for starter at left half of crankcase)	1	
—	—	spring washer B 8 DIN 137 k	1	
—	—	hex nut M 8 × 1 DIN 936 k	1	
33	263 z 209	cover (to generator)	1	
34	—	hex screw M 6 × 22 DIN 931 k (to fasten cover to crankcase) ..	1	
35	—	stud M 8 × 140 DIN 835 k (to fasten cover to crankcase) ..	1	
36	1541 z 310	screw, countersunk raised head (with internal thread)	1	
37	653 z 127	facing for crankcase	1	
—	—	screw, fillister head AM 6 × 20 DIN 85 k	1	
—	—	spring washer A 6 DIN 137 k	1	

www.zundappveteranenclub.nl

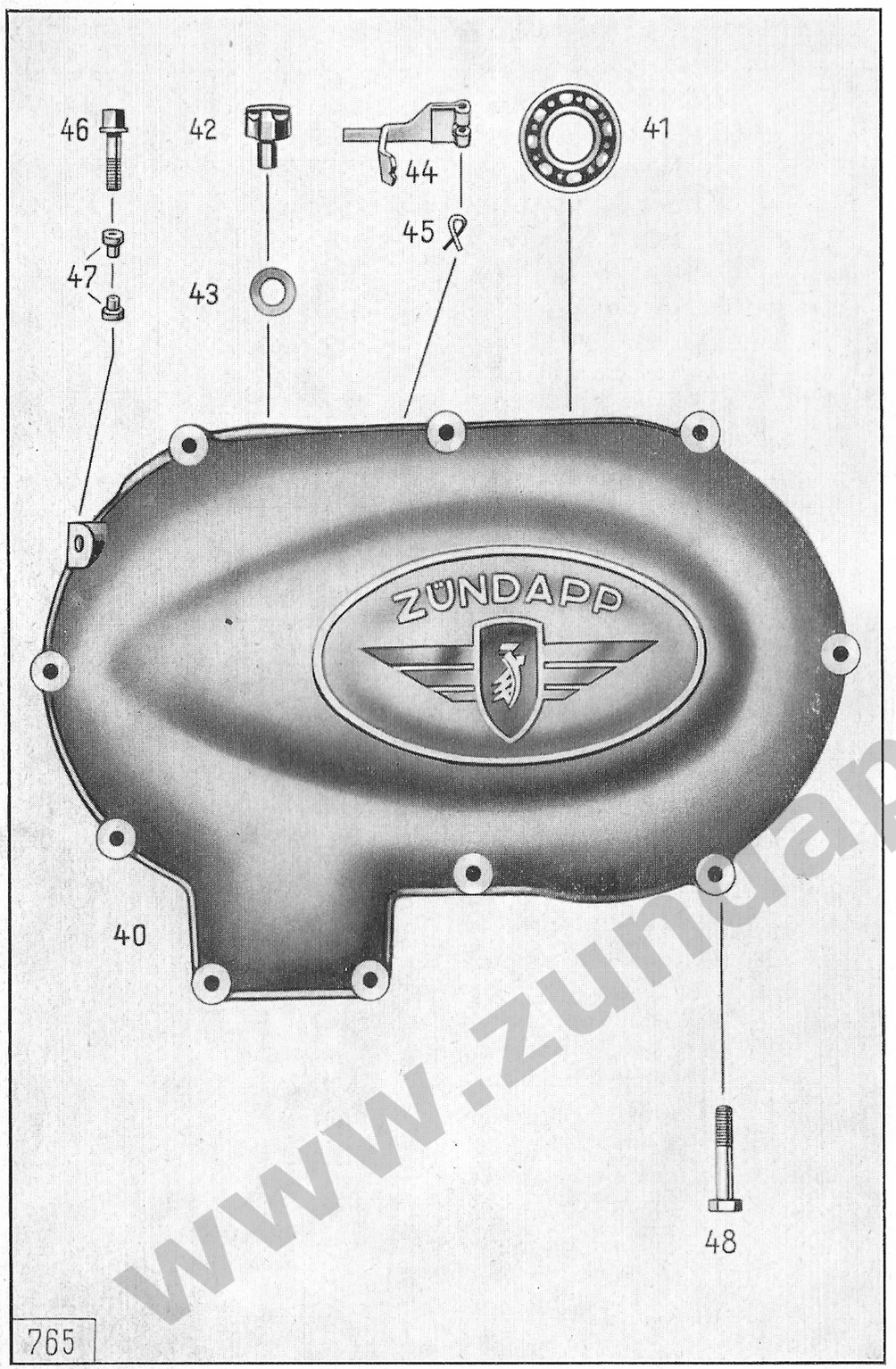

Key No.	Spare Part No.	Description	No. of Pieces	Remarks
		Crankcase Cover		
40	260 z 38	crankcase cover	1	
41	—	ball bearing 6203 DIN 625	1	
42	1121 z 32	supporting bolt	1	
43	1301 z 52	compensating shim } for supporting bolt	as required	
—	1301 z 616	compensating shim } for supporting bolt	as required	
44	670 z 220	contact breaker arm	1	
45	321 z 322	ratchet spring	1	
—	—	C-washer 3,2 DIN 6799	1	
46	131 z 528	contact bolt	1	
47	176 z 29	bushing	2	
—	—	washer 5,3 DIN 125	2	
—	—	hex nut M 5 DIN 934	1	
48	—	hex screw M 6 × 35 DIN 931 k (to fasten crankcase cover to crankcase)	8	

www.zundappveteranenclub.nl

Illustration 4, Group M: b) Housing and Cylinder, Cylinder and Cylinder Head

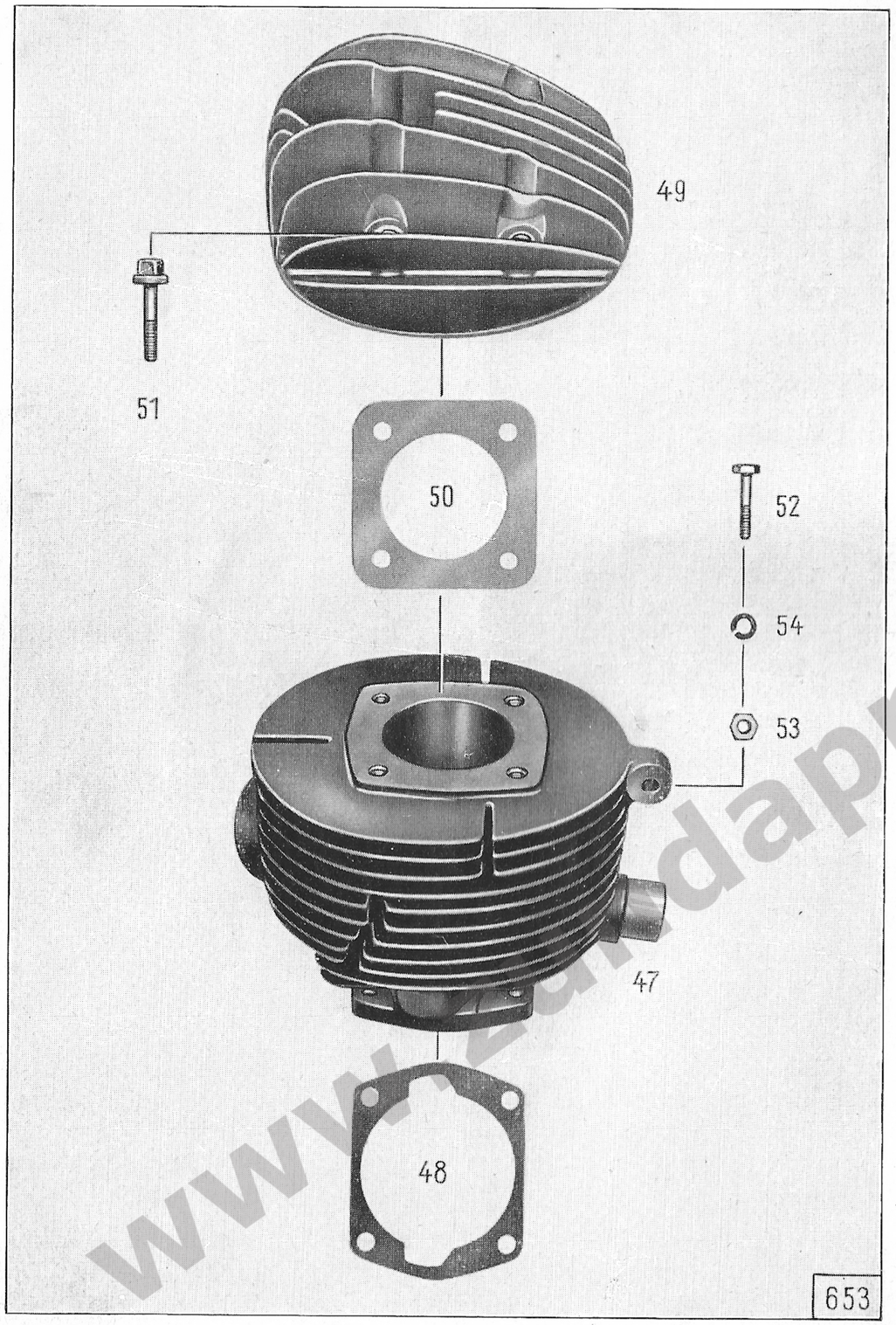

Illustration 4, Group M: b) Housing and Cylinder, Cylinder and Cylinder Head

Key No.	Spare Part No.	Description	No. of Pieces	Remarks
		Cylinder		
47	2162 z 213-8	cylinder	1	
48	468 z 315-0	cylinder base gasket	1	
49	273 z 162-0	cylinder head	1	
50	461 z 10-0	cylinder head gasket	1	
51	1551 z 016	square screw (to fasten cylinder head)	4	
52	—	hex screw M 8 × 35 DIN 931 k (to fasten engine to frame)	1	
53	—	hex nut M 8 DIN 934 k	1	
54	—	spring washer A 8 DIN 127 k	1	

www.zundappveteranenclub.nl

Illustration 5, Group M: c) Drive Mechanism, Crankshaft, Connecting Rod, and Piston

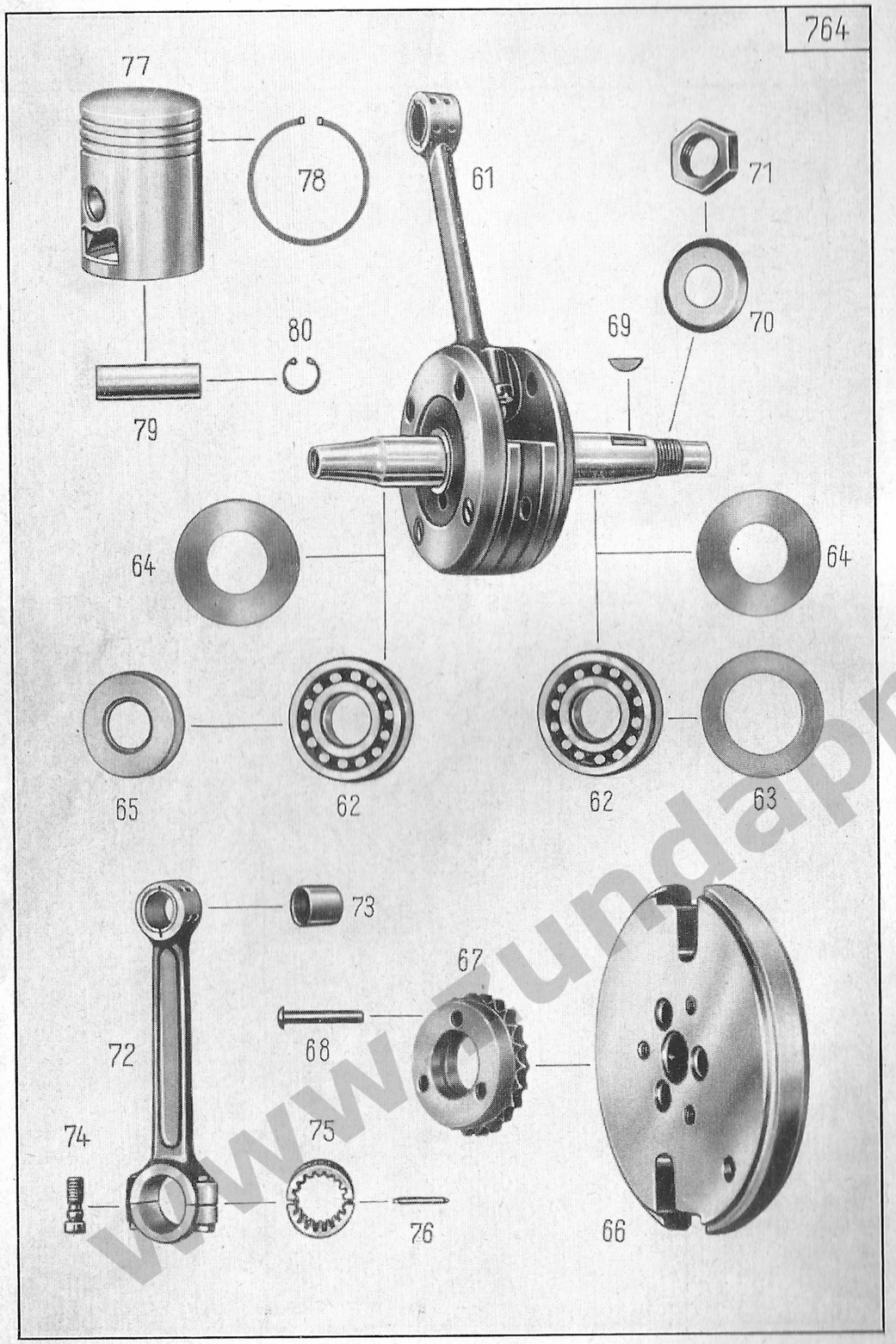

Illustration 5, Group M: c) Drive Mechanism, Crankshaft, Connecting Rod, and Piston

Key No.	Spare Part No.	Description	No. of Pieces	Remarks
		Crankshaft		
61	1950 k 209	crankshaft with connecting rod ..	1	
62	—	roller bearing NJM 25 DIN 5412 C 2 na	2	
63	1301 z 132	compensating shim 41 × 61,5 × 0,1	as required	betw. roller bearing and crankcase
—	1301 z 133	compensating shim 41 × 61,5 × 0,2		
—	1301 z 134	compensating shim 41 × 61,5 × 0,3		
—	1301 z 135	compensating shim 41 × 61,5 × 0,5		
—	1301 z 1012	compensating shim 41 × 61,5 × 0,15		
64	1281 z 382	covering washer	2	
65	—	radial gasket (oil seal) B 25 × 52 × 12 DIN 6503	1	
66	1310 z 63	flywheel with sprocket	1	
67	2101 z 152	sprocket 22 teeth (to flywheel) ..	1	
68	—	rivet, button head, 7 × 40 DIN 660	3	
69	—	key 4 × 6,5 DIN 6888	1	
70	1291 z 64	safety washer	1	
71	1001 z 020	hex nut	1	
		Connecting Rod		
72	1160 k 153	connecting rod	1	
73	184 z 548	gudgeon pin bushing	1	
74	1571 z 01	connecting rod screw	2	
75	1874 z 01	cage ring	1	
76	1871 z 01	bearing needle	18	
		Piston		
77	883 z 163-0	piston 67,0 mm ⌀ (standard)	1	
—	2473 k 79-0	piston 67,5 mm ⌀ (1st oversize) ..	1	
—	2473 k 80-0	piston 68,0 mm ⌀ (2nd oversize) ..	1	
—	2473 k 81-0	piston 68,5 mm ⌀ (3rd oversize) ..	1	
—	2473 k 82-0	piston 69,0 mm ⌀ (4th oversize) ..	1	
78	1262 z 105	piston ring 67,0 mm ⌀ (standard) ..	3	
—	2442 k 54-0	piston ring 67,5 mm ⌀ (1st oversize)	3	
—	2442 k 55-0	piston ring 68,0 mm ⌀ (2nd oversize)	3	
—	2442 k 56-0	piston ring 68,5 mm ⌀ (3rd oversize)	3	
—	2442 k 57-0	piston ring 69,0 mm ⌀ (4th oversize)	3	
79	121 z 1013	gudgeon pin	1	
80	—	circlip 18 × 1 DIN 472	2	

www.fundappveteranenclub.nl

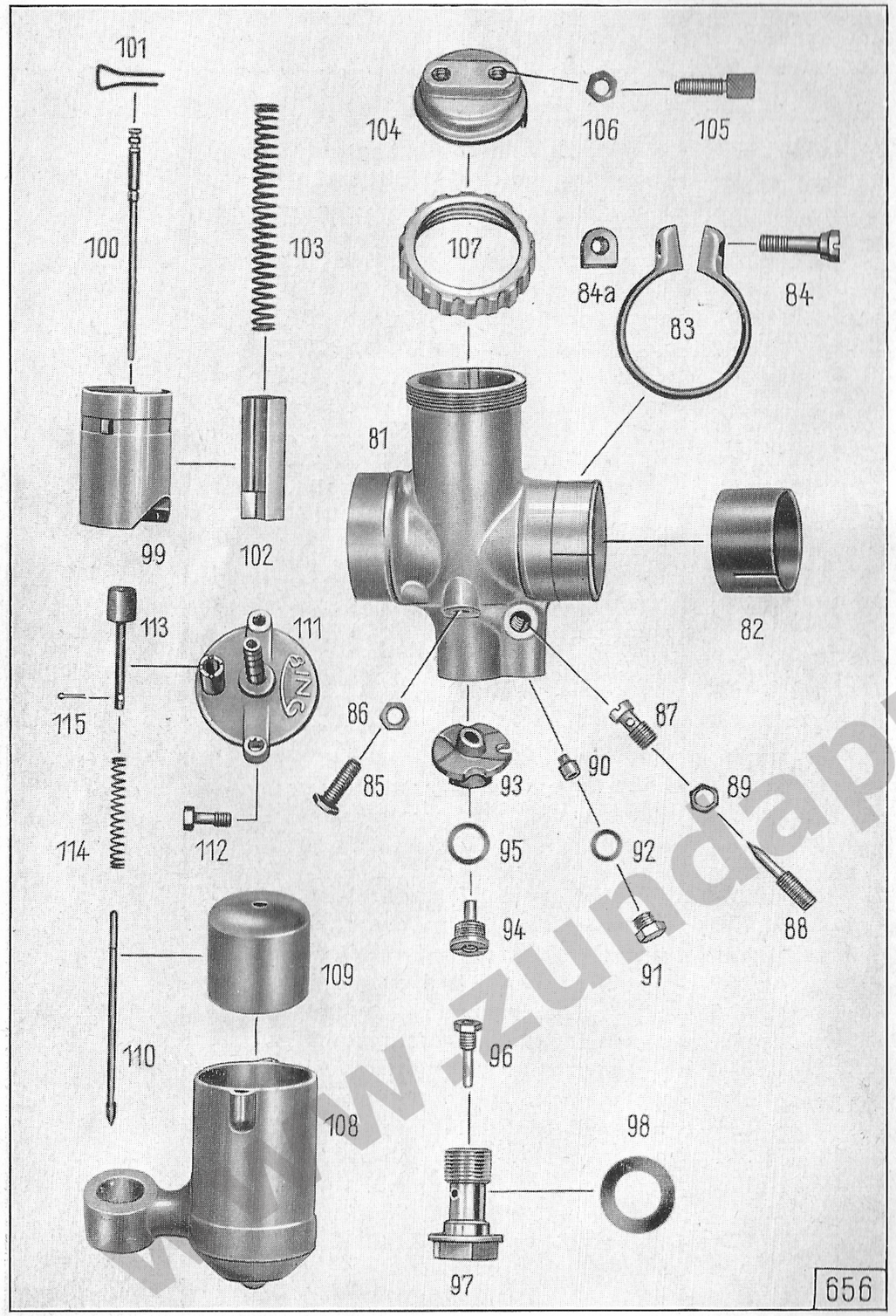

Key No.	Spare Part No.	Description	No. of Pieces	Remarks
		Carburettor		
—	6430 z 83-0	carburettor (model Bing 2/26/51) ..	1	
81	2403 k 102	carburettor housing	1	
82	2407 k 16-0	insulating bushing (to carburettor housing)	1	
83	2401 k 97-2	clamping ring	1	
84	2401 k 98-2	screw (to clamping ring)	1	
84a	2401 k 99-2	nut (to above screw)	1	
85	2401 k 3-2	idle running adjusting screw	1	
86	2401 k 6-2	nut (to idle running adjusting screw)	1	
87	2401 k 10-4	idle jet	1	
88	2401 k 14-2	idle air screw	1	
89	2401 k 12-4	nut (to idle air screw)	1	
90	2404 k 23-0	idle jet (size 40)	1	
91	2401 k 51-6	lock screw (to idle jet)	1	
92	2407 k 6-0	gasket (to lock screw)	1	
93	2403 k 90-0	mixing chamber insert (size 5)	1	
94	2404 k 1-0	needle jet (size 2,70)	1	
95	2407 k 12-0	gasket (to needle jet)	1	
96	2404 k 2-0	main jet (size 120)	1	
97	2403 k 6-0	jet block	1	97-02168
98	2407 k 1-0	gasket (to jet block) ..15 x 24.....	2	
99	2403 k 91-0	gas slide	1	
100	2401 k 88-0	jet needle	1	
101	2401 k 8-2	clip (to jet needle)	1	
102	2403 k 92-0	air slide	1	
103	2401 k 52-2	slide spring	2	
104	2403 k 71-0	cover plate	1	
105	2401 k 5-4	cable adjusting screw	2	
106	2401 k 6-2	nut (to cable adjusting screw) ..	2	
107	2403 k 51-0	nut (to seal cover)	1	
108	2403 k 93-0	float chamber	1	
109	2404 k 31-0	float	1	
110	2401 k 73-2	float needle	1	
111	2403 k 94-0	float chamber cover	1	
112	2401 k 61-2	fixing screw (to cover)	2	
113	2401 k 71-2	tickler	1	
114	2401 k 57-2	tickler spring	1	
115	2401 k 19-3	split pin	1	

www.zundappveteranenclub.nl

Illustration 7, Group M: f) Air Cleaner and Covering

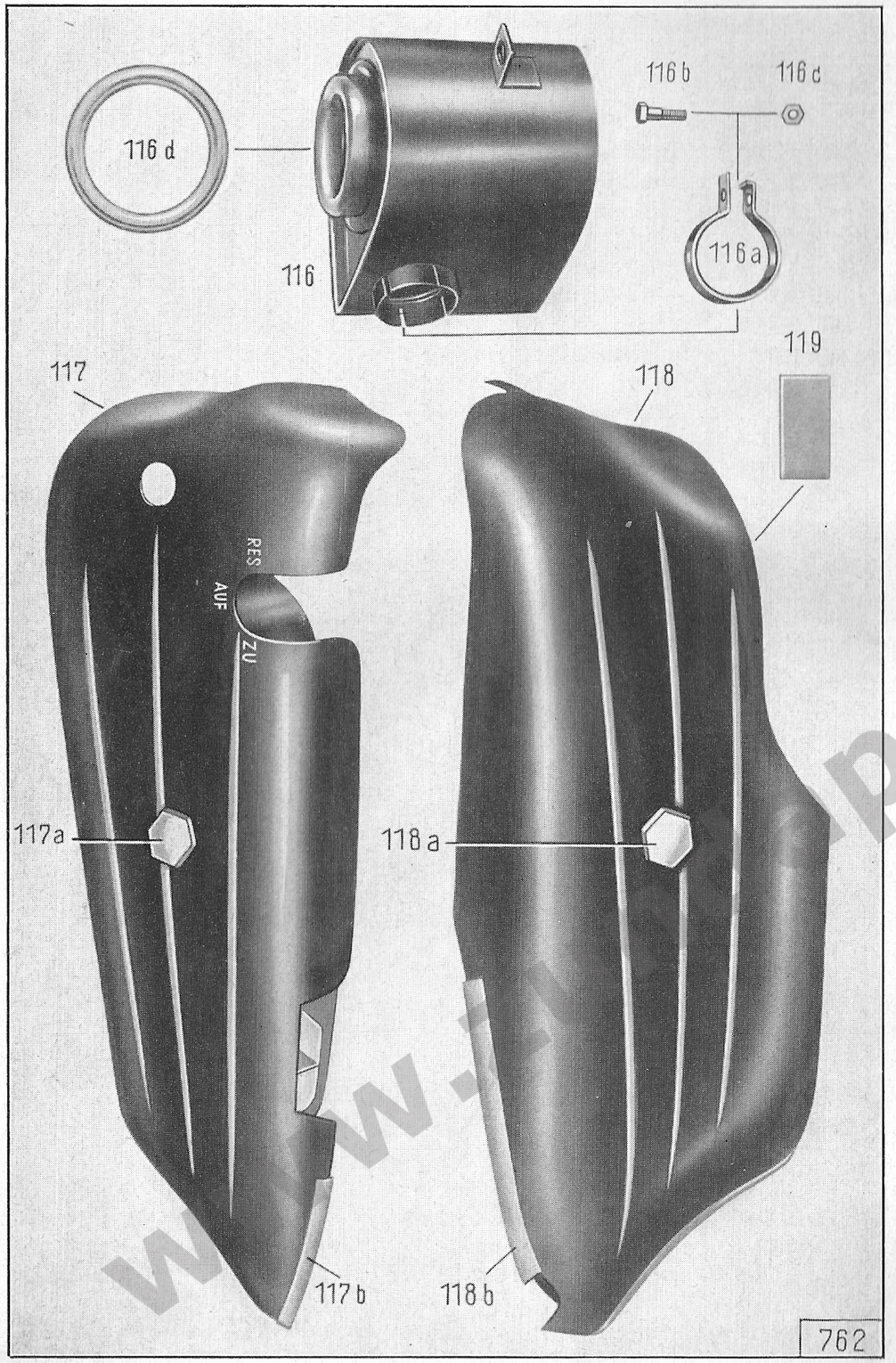

Illustration 7, Group M: f) Air Cleaner and Covering

Key No.	Spare Part No.	Description	No. of Pieces	Remarks
		Air Cleaner		
116	6410 z 209-8	air cleaner	1	
116a	1441 z 160	clamp	1	
116b	—	hex screw M 6 × 22 DIN 931 k (to clamp)	1	
116c	—	hex nut M 6 DIN 934 k	1	
—	—	hex screw M 6 × 10 DIN 933 k (to fasten air cleaner to frame)	1	
—	—	spring washer A 6 DIN 137 k	1	
116d	1236 z 341	rubber ring	1	
		Covering		
117	6350 z 132-0	left half of covering	1	
117a	1551 z 441-4	hex screw	1	
—	1331 z 850-3	distance tube	1	
117b	1396 z 247-0	profile rubber	1	
—	1146 z 103-0	rubber plate	1	
—	—	spring washer A 10 DIN 137	1	
118	650 z 299-8	right half of covering	1	
118a	1551 z 441-4	hex screw	1	
—	1331 z 850-3	distance tube	1	
118b	1396 z 236-0	profile rubber	2	
—	—	spring washer A 10 DIN 137	1	
119	1146 z 99-0	rubber plate	1	

www.flippveteranenclub.nl

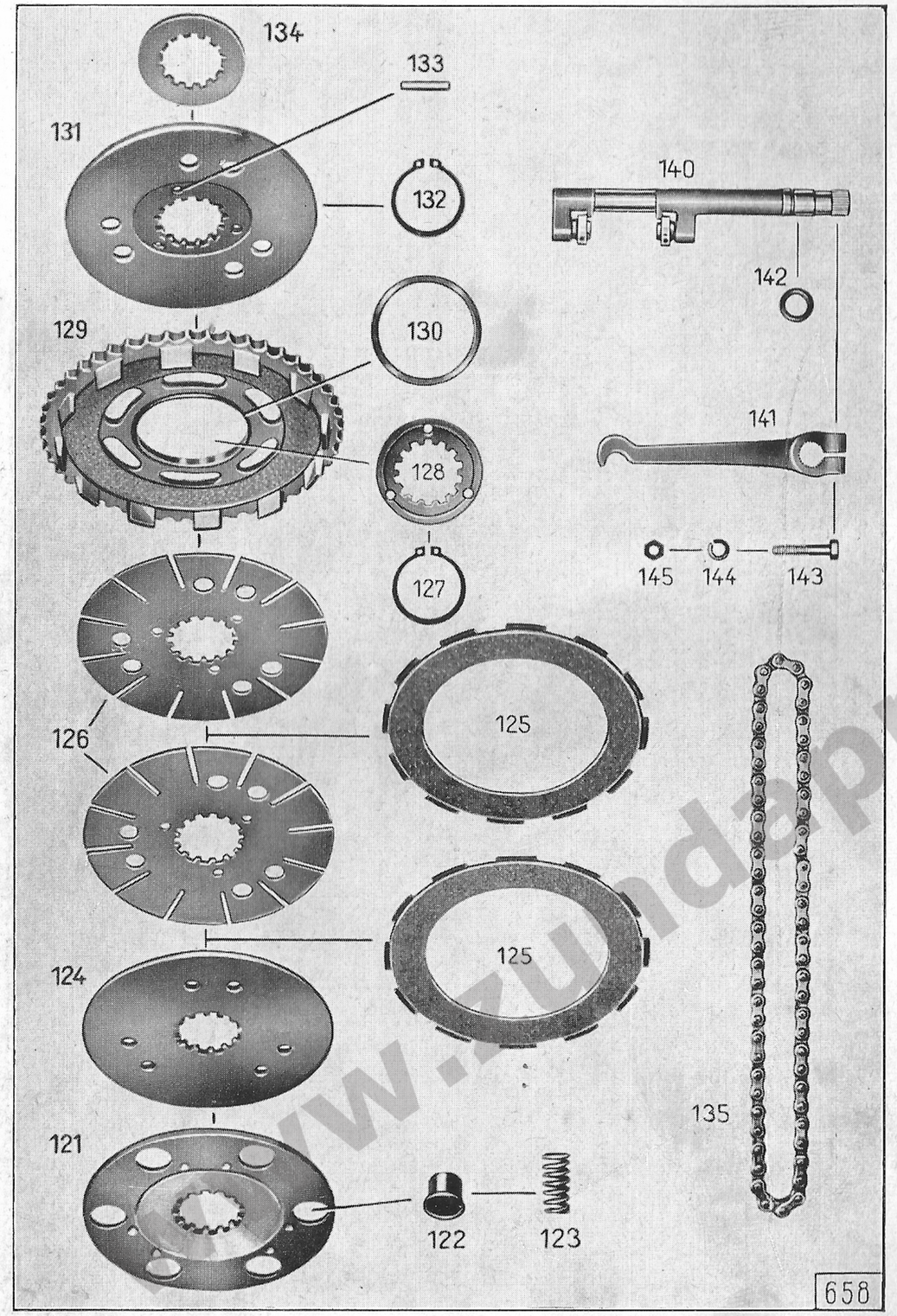

Illustration 8, Group M: g) Clutch, Clutch, Clutch Operating Mechanism

Key No.	Spare Part No.	Description	No. of Pieces	Remarks
		Clutch		
121	921 z 69	spring plate	1	
122	781 z 273	spring cup (in spring plate)	6	
123	321 z 45	clutch spring	6	
124	921 z 67	clutch pressure plate	1	
125	920 z 53	clutch disk (with lining)	3	
126	921 z 206	clutch disk	3	
127	—	circlip 35 × 1,5 DIN 471	1	with ground side surfaces
128	1231 z 212	spacer ring	1	
129	2100 z 171	clutch sprocket with bushing, 48 teeth	1	
130	184 z 317	bushing (within clutch sprocket)	1	
131	921 z 203	clutch plate	1	
132	—	circlip 35 × 1,5 DIN 471	1	with ground side surfaces
133	1691 z 113	push rod	3	
134	1231 z 213	pressure ring	1	
135	—	roller chain 62 links, endless A 9,5 × 9,5 DIN 73 232	1	
		Clutch Operating Mechanism		
140	1940 z 25	clutch pressure bar, complete	1	
141	671 z 318	clutch lever (for clutch pressure bar)	1	
142	1236 z 222	packing washer	1	
143	—	hex screw M 6 × 28 DIN 931 k (to fasten clutch lever to clutch pressure bar)	1	
144	—	spring washer A 6 DIN 127 k	1	
145	—	hex nut M 6 DIN 934 k	1	

www.zundappveteranenclub.nl

Illustration 9, Group G: c) Shafts and Gears, Selector Shaft

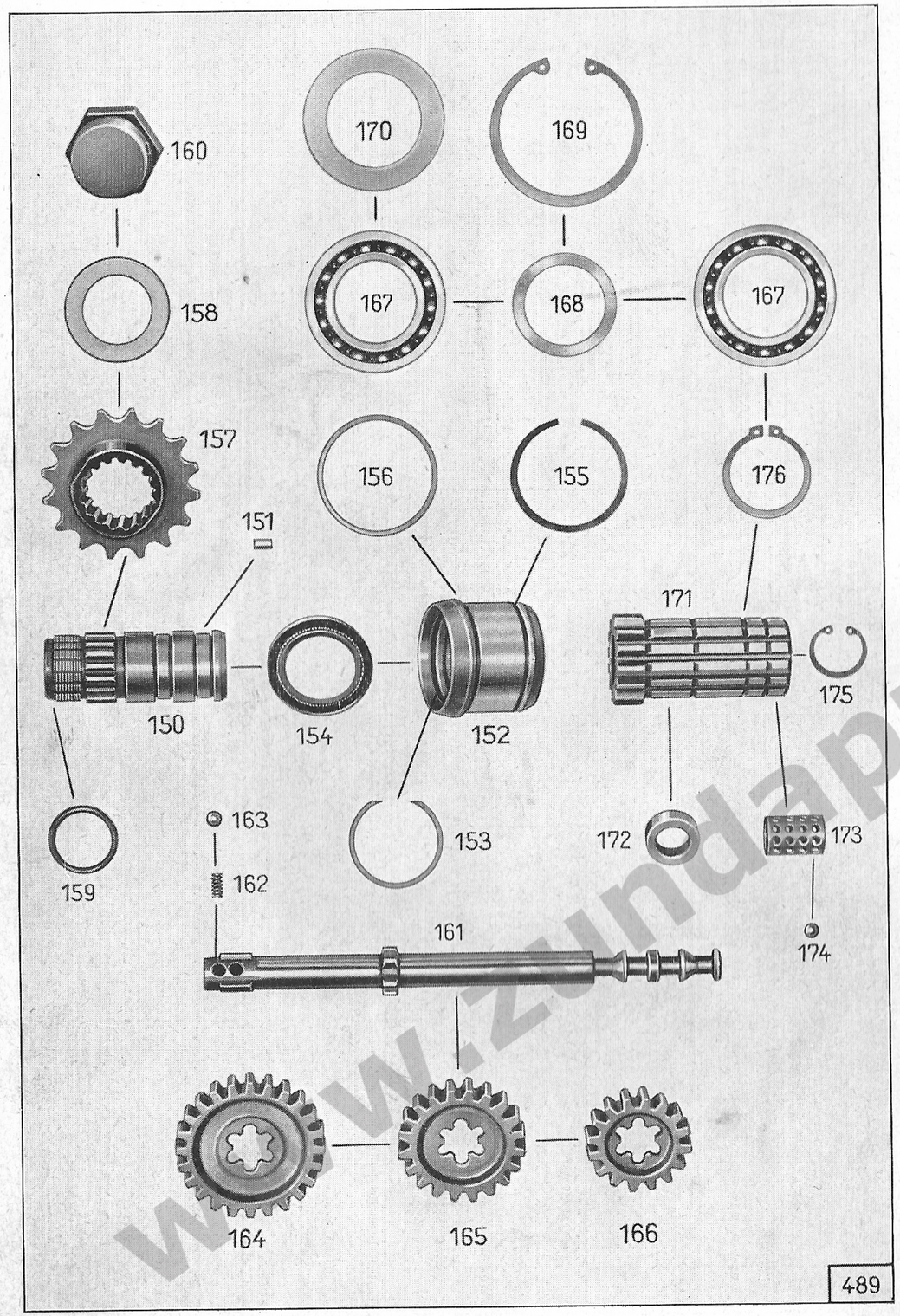

Illustration 9, Group G: c) Shafts and Gears, Selector Shaft

Key No.	Spare Part No.	Description	No. of Pieces	Remarks
		Selector Shaft		
150	961 z 125	final drive shaft	1	
151	1871 z 07	roller	38	
152	1871 z 154	bearing ring (to left half of crankcase)	1	
153	1251 z 99	internal circlip } in order to compensate bearing play inside the bearing ring	2	at option
—	1251 z 251	internal circlip } in order to compensate bearing play inside the bearing ring	2	at option
—	1251 z 252	internal circlip } in order to compensate bearing play inside the bearing ring	2	at option
154	—	radial gasket (oil seal) B 32 × 45 × 7 DIN 6503 (in bearing ring)	1	
155	1251 z 176	snap ring (to fasten bearing ring in half of crankcase)	1	
156	1301 z 603	compensating shim 48,1 × 52,3 × 0,5 } as required		betw. bearing ring and half of crankcase
—	1301 z 604	compensating shim 48,1 × 52,3 × 0,3 } as required		betw. bearing ring and half of crankcase
—	1301 z 605	compensating shim 48,1 × 52,3 × 0,2 } as required		betw. bearing ring and half of crankcase
157	2101 z 60	sprocket 16 teeth (on final drive shaft)	1	
158	1291 z 65	safety washer	1	
159	1236 z 220	packing washer	1	
160	1001 z 214	lock nut (to fasten sprocket to final drive shaft)	1	
161	1921 z 701	selector shaft	1	
162	321 z 312	pressure spring	2	
163	—	ball 6 mm III DIN 5401	3	
164	2131 z 303	gear wheel 1st speed 24 teeth ..	1	
165	2131 z 304	gear wheel 2nd speed 20 teeth ..	1	
166	2131 z 307	gear wheel 3rd speed 17 teeth ..	1	
167	—	ball bearing 16 007 DIN 625 (to right half of crankcase)	2	
168	—	spacer ring 35 × 45 × 2 DIN 988 (between the ball bearings) ..	1	

www.zundappveteranenclub.nl

www.zundappveteranenclub.nl

Illustration 9, Group G: c) Shafts and Gears, Selector Shaft

Key No.	Spare Part No.	Description	No. of Pieces	Remarks
169	—	circlip 62 x 2 DIN 472	1	
170	1301 z 133	compensating shim (between crankcase and ball bearing) ..	1	
171	960 z 101	clutch hub (simultaneously 4th speed)	1	
172	184 z 324	bearing bushing (in clutch hub) ..	1	
173	1871 z 151	ball cage	1	
174	—	ball 4 mm III DIN 5401	40	
175	1251 k 259-0	circlip J 23 × 1,2	1	
176	—	circlip 35 × 1,5 DIN 471 (to fasten clutch hub to half of crankcase)	1	with ground side surfaces

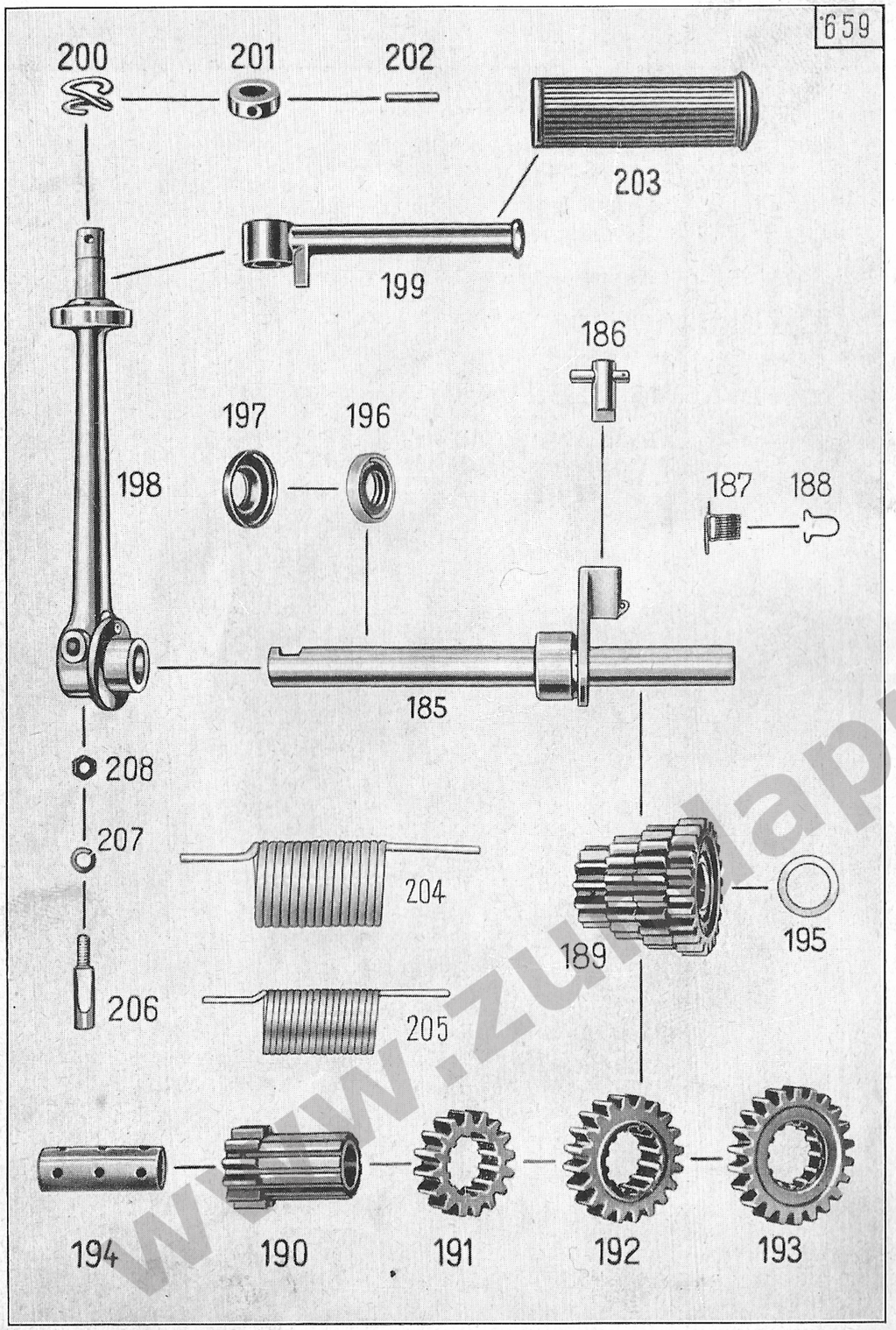

Illustration 10, Group G: c) Shafts and Gears, Starter Shaft

Key No.	Spare Part No.	Description	No. of Pieces	Remarks
		Starter Shaft		
185	1940 z 205-0	starter shaft, complete	1	
186	1690 z 3	engaging pin with return pin	1	
187	321 z 314	lock spring	1	
188	211 z 201	spring clip	1	
189	2130 z 101	counter-gear wheel block, compl.	1	
190	2131 z 238	gear wheel 1st speed 12 teeth ..	1	
191	2131 z 239	gear wheel 2nd speed 16 teeth ..	1	
192	2131 z 247	gear wheel 3rd speed 19 teeth ..	1	
193	2131 z 237	drive gear wheel 22 teeth	1	
194	184 z 316	bushing	1	
195	1301 z 177	compensating shim 18,2 × 25,7 × 0,5	as required	betw. gear wheel block and right half of crankcase
—	1301 z 367	compensating shim 18,2 × 25,7 × 0,2		
—	1301 z 368	compensating shim 18,2 × 25,7 × 0,3		
196	—	gasket „Diring" (model K 200) 17 × 30 × 7 DIN 6503	1	
197	781 z 274	protective cap (for gasket "Diring")	1	
198	901 z 206-4	starter arm	1	
199	131 z 02	kickstarter rod	1	
200	1251 z 253	double spring washer	1	
201	1231 z 215	fixing ring	1	
202	—	pin 4 × 22 DIN 1471	1	
203	616 z 01	rubber sleeve	1	
204	321 z 573-3	return spring (to starter shaft)	1	
205	321 z 574-3	return spring (to starter shaft)	1	
206	121 z 553	cotter pin (to fasten starter arm to starter shaft)	1	
207	—	spring washer A 6 DIN 127 k	1	
208	—	hex nut M 6 DIN 934 k	1	

www.zundappveteranenclub.nl

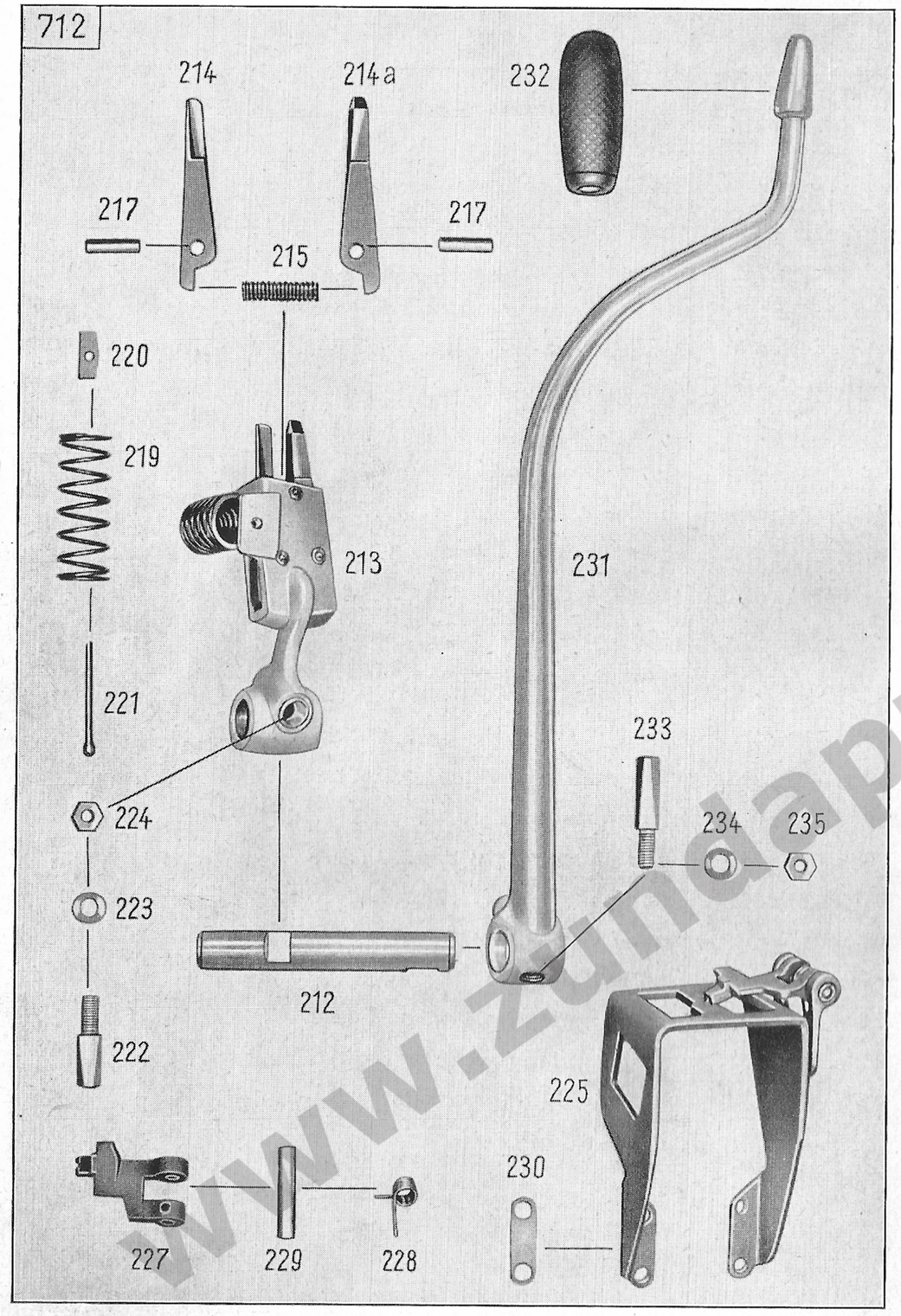

Key No.	Spare Part No.	Description	No. of Pieces	Remarks
		Footshift Mechanism		
212	1941 z 311-4	footshift shaft	1	
213	670 k 233	gear selector fork, compl.	1	
214	841 z 40-0	gear selector finger, left	1	
214a	841 z 41-0	gear selector finger, right	1	
215	321 z 317	pressure spring	1	
217	—	riveting pin A 5 h 9 × 20 DIN 7341	3	
219	321 z 316	return spring	1	
220	1281 z 359	joint	2	
221	—	split pin 3 × 35 DIN 94	1	
222	121 z 1112-3	cotter pin (to fasten gear selector fork to footshift shaft)	1	
223	—	spring washer B 6 DIN 137 k	2	
224	—	hex nut M 6 DIN 934 k	1	
225	200 k 107	gear selector support with ratchet	1	
227	841 z 39	ratchet	1	
228	321 z 322	ratchet spring	1	
229	—	riveting pin A 6 h 9 × 32 DIN 7341	1	
230	1281 z 242	joint (to gear selector support)	4	at option
—	1281 z 243	joint (to gear selector support)	4	at option
—	1281 z 244	joint (to gear selector support)	4	at option
231	683 z 11-0	footshift lever	1	
232	616 z 25	rubber sleeve	1	
233	121 z 553	cotter pin (to fasten footshift lever to footshift shaft)	1	
234	—	spring washer B 6 DIN 137 k	2	
235	—	hex nut M 6 DIN 934 k	1	

www.zundappveteranenclub.nl

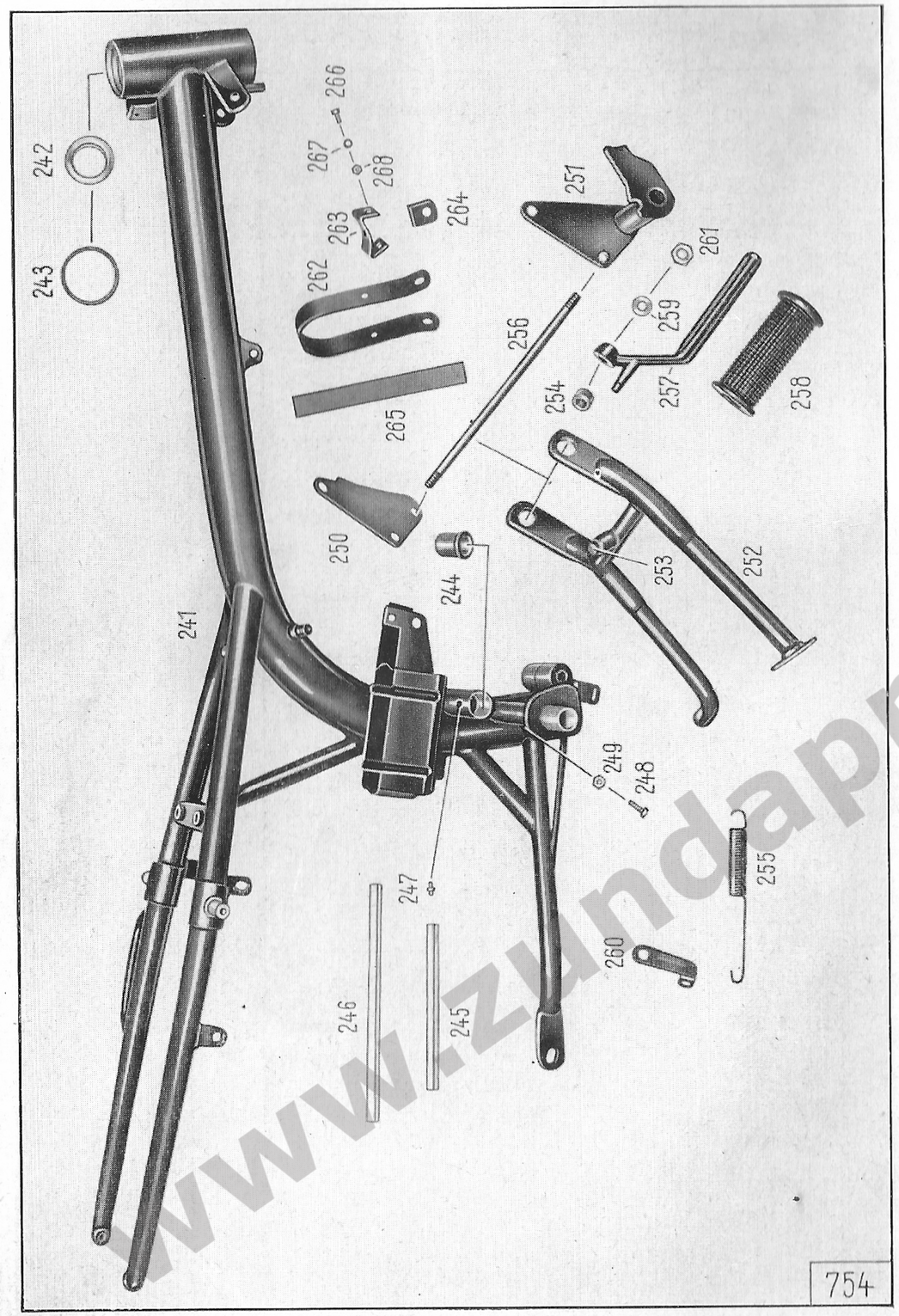

Key No.	Spare Part No.	Description	No. of Pieces	Remarks
		Frame		
241	6690 z 333-8	frame	1	
242	1871 z 155	frame race	2	
243	—	not mounted on model 250 S Super-Sabre	—	
244	184 z 525-0	bushing (for swinging arm)	2	
—	786 z 17	dust protective cap (on bushing for antitheft lock)	1	
245	1396 z 255	rubber lace	2	
246	1396 z 256	rubber lace	1	
247	1080 z 1	grease nipple	1	
248	—	hex screw M 6 × 20 DIN 933 k (stop screw for footbrake lever)	1	
249	—	hex nut M 6 DIN 934 k	1	
250	1140 z 1238-8	bracket, left-hand (to lower engine suspension)	1	
251	1140 z 1257-8	bracket, right-hand (to lower engine suspension)	1	
252	1750 z 234-8	center stand	1	
253	616 z 219	rubber damper (in center stand)	1	
254	1331 z 923-0	distance tube	2	
255	321 z 545	return spring (to center stand)	1	
256	121 z 1142-2	footrest rod	1	
257	631 z 598-8	footrest arm	2	
258	616 z 237	footrest rubber	2	
259	—	spring washer B 12 DIN 137	1	
260	1181 z 413	bracket (to return spring)	1	
261	—	hex nut M 12 × 1,5 DIN 936 k	2	
262	1141 z 2216-2	clip (to fasten cylinder to frame)	1	
263	1141 z 2214-2	supporting plate	1	
264	1141 z 2215-2	reinforcing plate	2	
265	1396 z 251-0	rubber band	1	
266	—	hex screw M 6 × 12 DIN 933 k (to fasten supporting plate to clip)	2	
267	—	spring washer B 6 DIN 137 k	2	
268	—	hex nut M 6 DIN 934 k	2	

www.zundappveteranenclub.nl

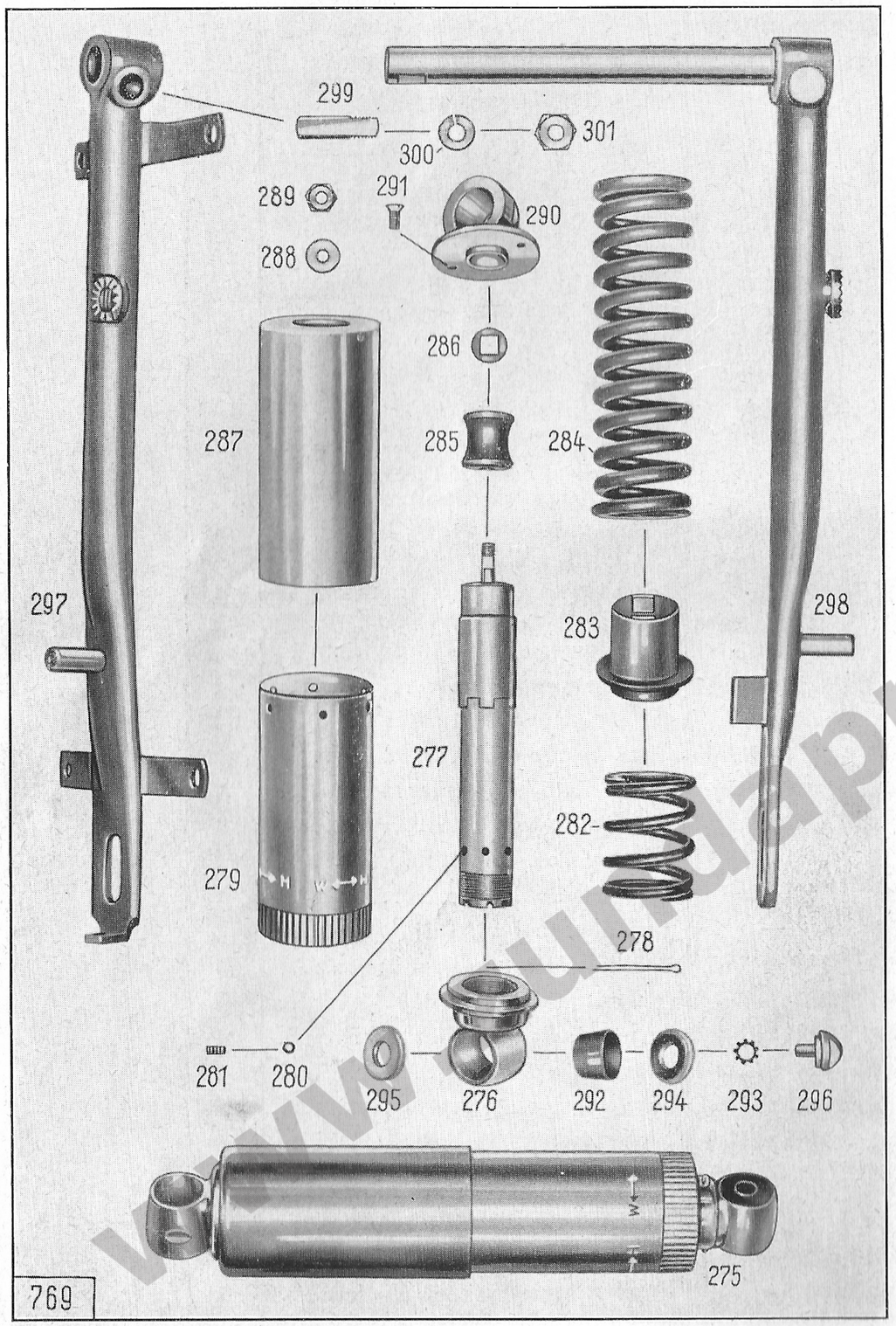

Key No.	Spare Part No.	Description	No. of Pieces	Remarks
		Spring Unit (so-called "Spring Leg") up to Frame No. 932 002		
275	6350 z 135-0	spring leg with shock absorber, complete	2	
276	553 z 113-0	bar head, lower	2	
277	6350 z 103-0	shock absorber	2	
278	—	split pin 3 × 45 DIN 94 (to fasten shock absorber to lower bar head)	2	
279	980 z 6	adjusting sleeve	2	
—	1127 z 5	distance bolt	12	
280	—	ball 5,5 mm III DIN 5401	6	
281	321 z 312	pressure spring (to ball)	6	
282	321 z 542	pressure spring, short	2	
283	631 z 547	spring carrier	2	
284	321 z 543	pressure spring, long	2	
285	616 z 223-0	rubber damper (on shock absorber)	2	
—	616 z 265-0	rubber damper	2	
286	1301 z 667	washer	2	
287	173 z 103-0	protective sleeve, outer	2	
288	—	spring washer B 8 DIN 137 k	2	
289	—	hex nut M 8 DIN 934 k	2	
290	553 z 112-0	bar head, upper	2	
291	—	screw, countersunk raised head, AM 6 × 12 DIN 91 crp (to fasten upper bar head to protective sleeve)	4	
292	176 z 44-0	rubber bushing (in upper and lower bar heads)	8	
293	—	shake-proof (toothed) washer A 8,4 DIN 6797	4	
294	1301 z 1052-3	washer	4	
295	1301 z 1053-3	washer	4	
296	1541 z 320-3	lock screw (to fasten spring leg to frame as well as to swinging fork)	4	
		Swinging Fork		
297	710 z 224-8	swinging arm, left-hand	1	
298	710 z 251-0	swinging arm, right-hand, with shaft	1	
299	121 z 1085-3	cotter pin (to fasten swinging arm to shaft)	1	
300	—	spring washer A 12 DIN 127 k	1	
301	—	hex nut M 12 × 1,5 DIN 936 k	1	

www.sundappveteranenclub.nl

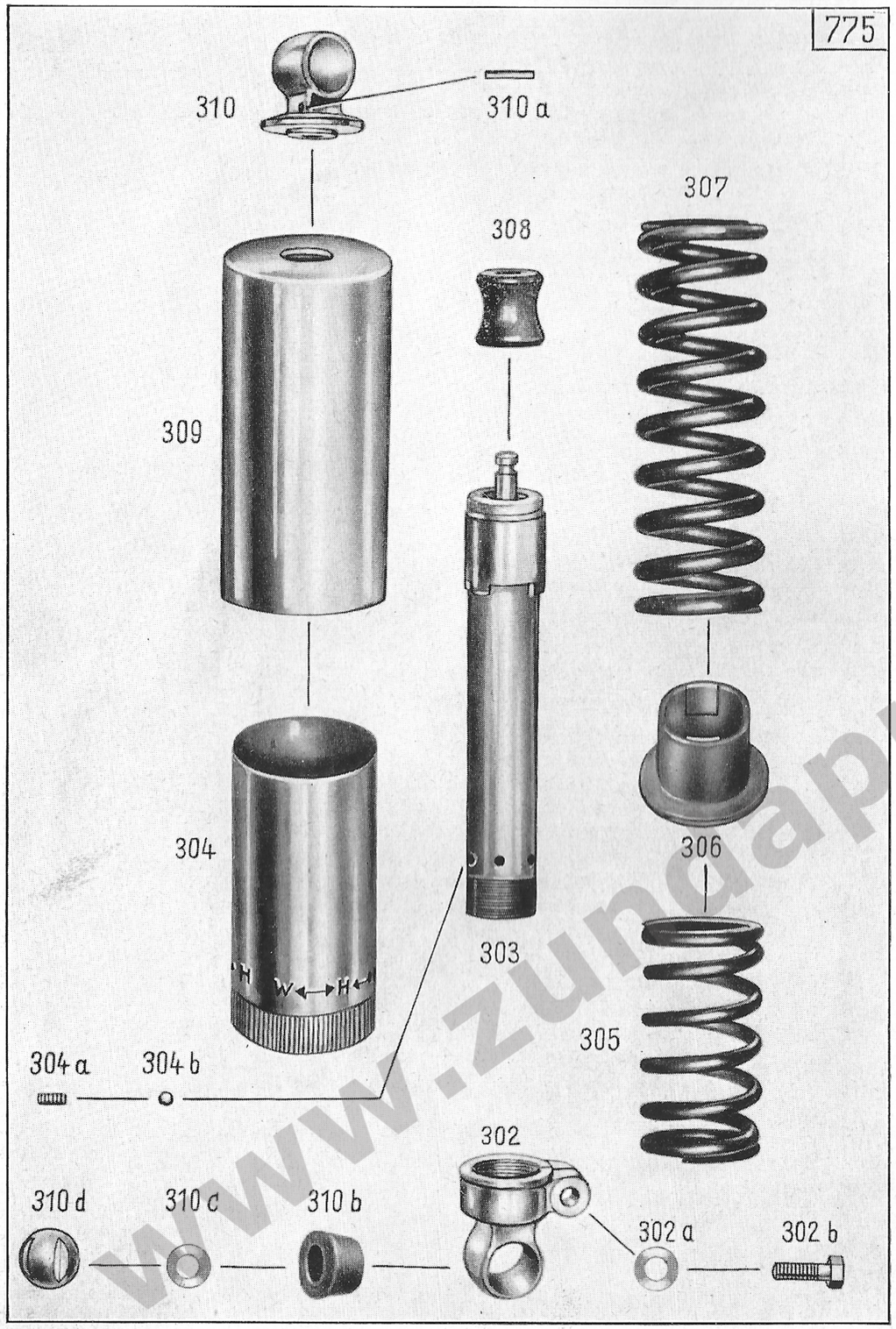

Illustration 13a, Group R: a) Frame, Spring Leg

Key No.	Spare Part No.	Description	No. of Pieces	Remarks
		Spring Unit (so-called "Spring Leg") from Frame No. 932 003		
—	6350 z 144-0	spring leg with shock absorber, complete	2	
302	553 z 111	bar head, lower	2	
302a	—	spring washer A 8 DIN 137 k	2	
302b	—	hex screw M 8 × 25 DIN 931 k	2	
303	6350 z 136-2	shock absorber	2	
304	980 z 10-0	adjusting sleeve	2	
304a	321 z 312-0	pressure spring	6	
304b	—	ball 5,5 mm III DIN 5401	6	
305	321 z 593-2	pressure spring, short	2	
306	631 z 547-0	spring carrier	2	
307	321 z 594-2	pressure spring, long	2	
308	616 z 223-0	rubber damper (on shock absorber)	2	
—	616 z 265-0	rubber damper	2	
309	173 z 121-0	protective sleeve, outer	2	
310	553 z 114-0	bar head, upper	2	
310a	—	pin 4 × 20 DIN 1472 (to fasten upper bar head as well as protective sleeve to shock absorber)	4	
310b	176 z 40-0	rubber bushing (in upper and lower bar heads)	8	
310c	—	spring washer A 8 DIN 137 k	4	
310d	1541 z 311-3	lock screw (to fasten spring leg to frame as well as to swinging fork)	4	

www.zundappveteranenclub.nl

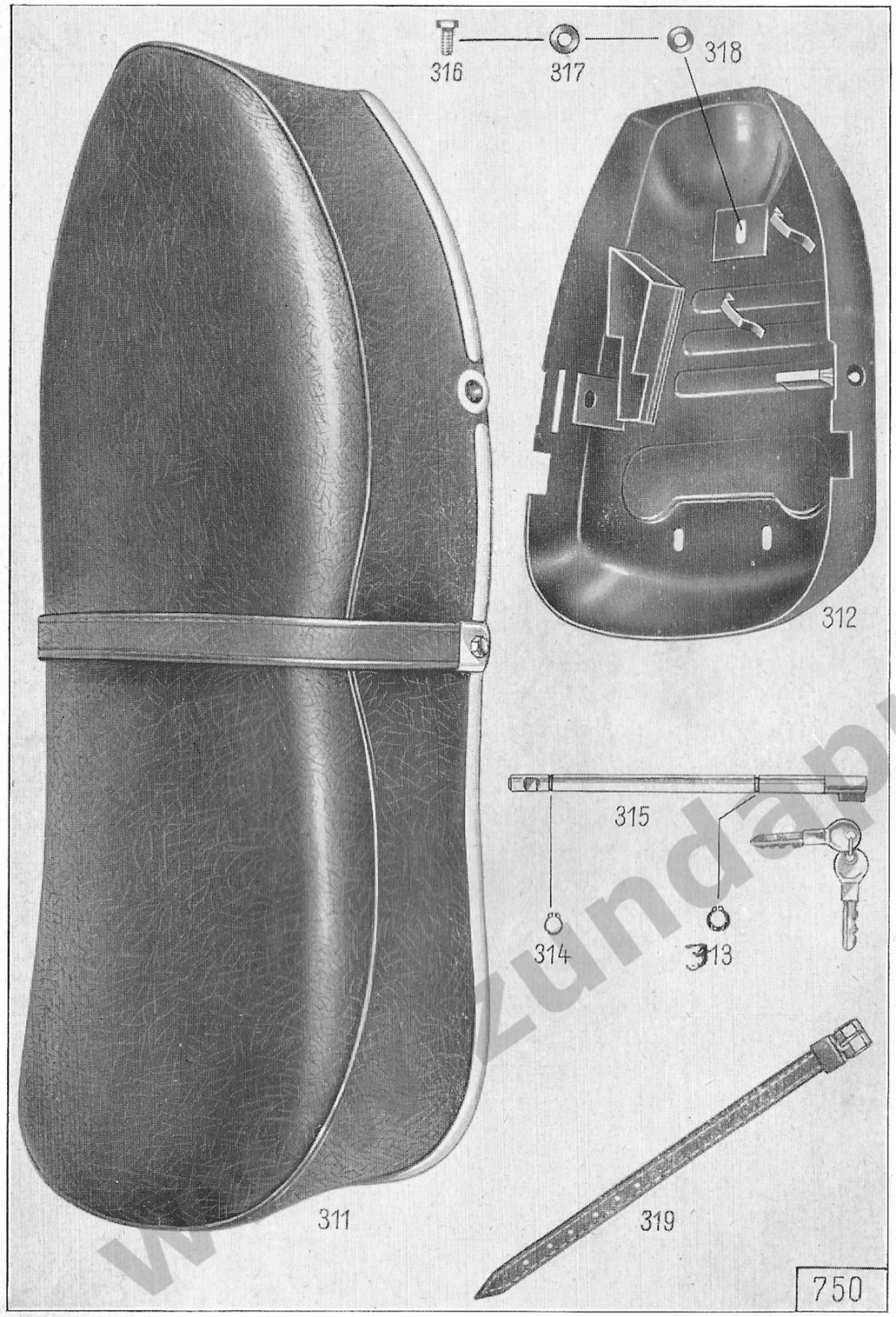

Illustration 14, Group R: b) Dual Seat and Toolbox

Key No.	Spare Part No.	Description	No. of Pieces	Remarks
		Dual Seat		
311	6330 k 50-0	dual seat, complete	1	
—	6347 z 3-0	dual seat cover	1	
—	1551 z 442-3	square screw	21	
—	1284 z 16-6	fashioned washer	21	
—	1011 z 207-3	countersunk nut	21	
—	6346 z 16	foam rubber cushion	1	
—	1141 z 2170-8	supporting plate	2	
—	321 z 550-8	pressure spring	4	
—	1113 z 4	eyelet	1	
—	2360 k 3-0	holding strap	1	
—	1143 z 105-0	holding plate	2	
—	1141 z 2143-0	clamping plate	2	
—	—	hex screw M 6 × 15 DIN 933 crp	2	
—	—	spring washer A 6 DIN 137 k	2	
—	946 z 7	rubber band for buttons	1	
—	943 z 26	moulding, left front part	1	
—	943 z 27	moulding, right front part	1	
—	943 z 28	moulding, right front part	1	
—	943 z 29	moulding, rear part	1	
		Toolbox		
312	6230 z 143-8	toolbox	1	
313	1251 k 265	circlip	1	
314	—	circlip 10 × 1 DIN 471	1	
315	6040 z 275-3	antitheft lock for toolbox	1	
—	1396 z 254	rubber band	1	
—	—	hollow rivet A 4 × 8 × 6 DIN 7331	5	
316	—	hex screw M 8 × 15 DIN 933 k (to fasten toolbox to frame)	3	
317	1301 z 035	washer	3	
318	—	spring washer B 8 DIN 137 k	3	
319	1390 z 118-0	strap (with buckle) for toolbox	1	

www.zundappveteranenclub.nl

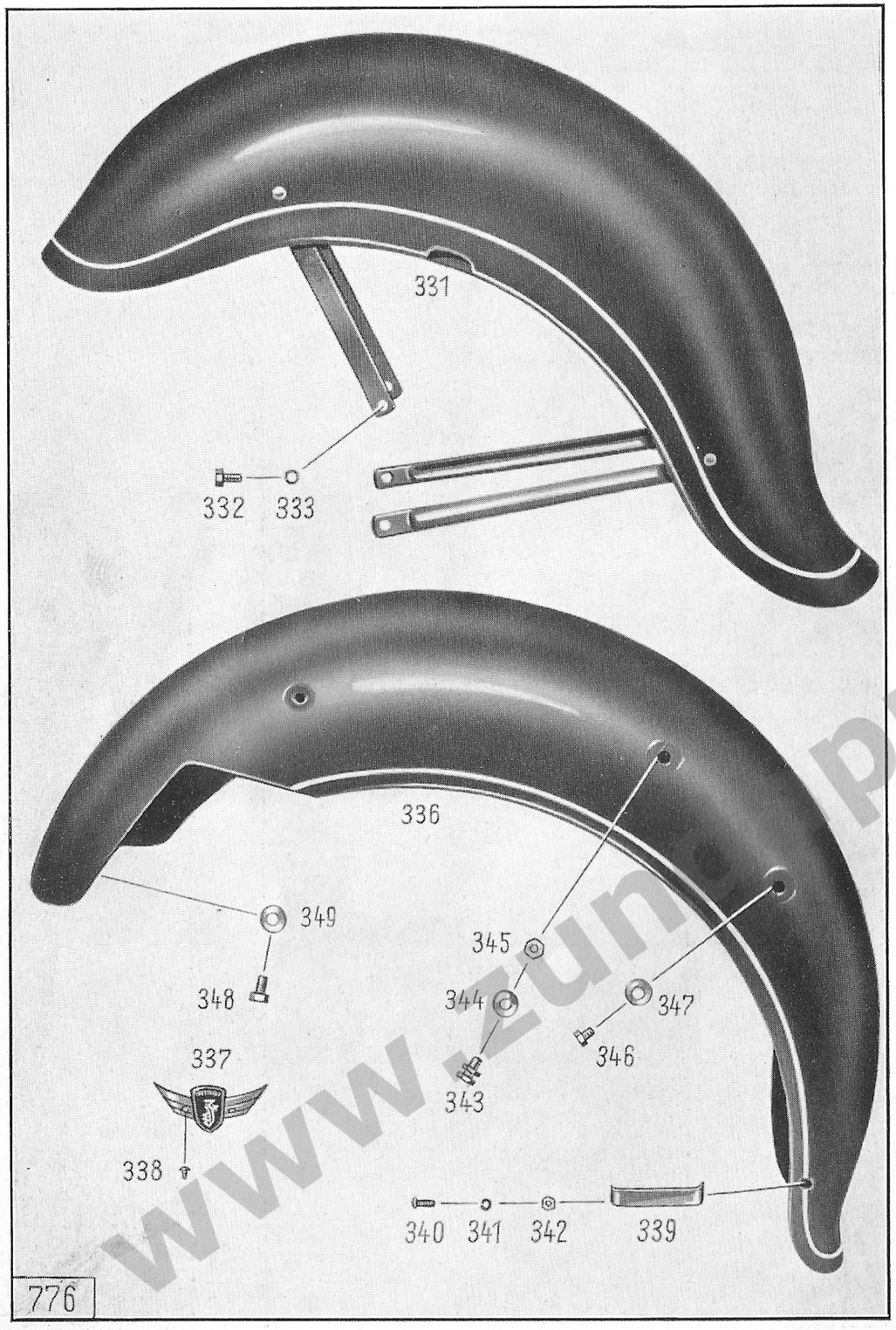

Key No.	Spare Part No.	Description	No. of Pieces	Remarks
		Front Mudguard		
331	6370 z 182-8	front mudguard	1	
332	—	hex screw M 8 × 12 DIN 933 k (to fasten mudguard to front fork)	4	
333	—	spring washer A 8 DIN 127 k	4	
		Rear Mudguard		
336	6370 z 185-8	rear mudguard	1	
—	616 z 238	plug	1	
337	1483 z 66-8	manufacturer's plate	1	
338	—	screw, countersunk raised head, AM 3 × 6 DIN 91 crp	2	
—	—	spring washer A 3 DIN 137 k	2	
—	—	hex nut M 3 DIN 934 k	2	
339	211 z 247-2	yoke (to number plate)	2	
340	—	screw, button head, AM 5 × 12 DIN 86 k	5	
341	—	spring washer A 5 DIN 127 k	5	
342	—	hex nut M 5 DIN 934 k	5	
343	131 z 545-3	retaining bolt (to fix dual seat)	2	
344	—	spring washer B 8 DIN 137 k	2	
345	—	hex nut M 8 DIN 934 k	2	
—	—	hex screw M 8 × 15 DIN 933 k (to fasten mudguard to frame struts, front part)	2	
—	—	spring washer B 8 DIN 137 k	2	
—	—	hex nut M 8 DIN 934 k	2	
346	—	hex screw M 8 × 10 DIN 933 k (to fasten mudguard to frame struts, rear part)	2	
347	—	spring washer B 8 DIN 137 k	2	
348	—	hex screw M 8 × 15 DIN 933 k (to fasten mudguard to frame, lower part)	1	
349	—	spring washer B 8 DIN 137 k	1	

www.zundappveteranenclub.nl

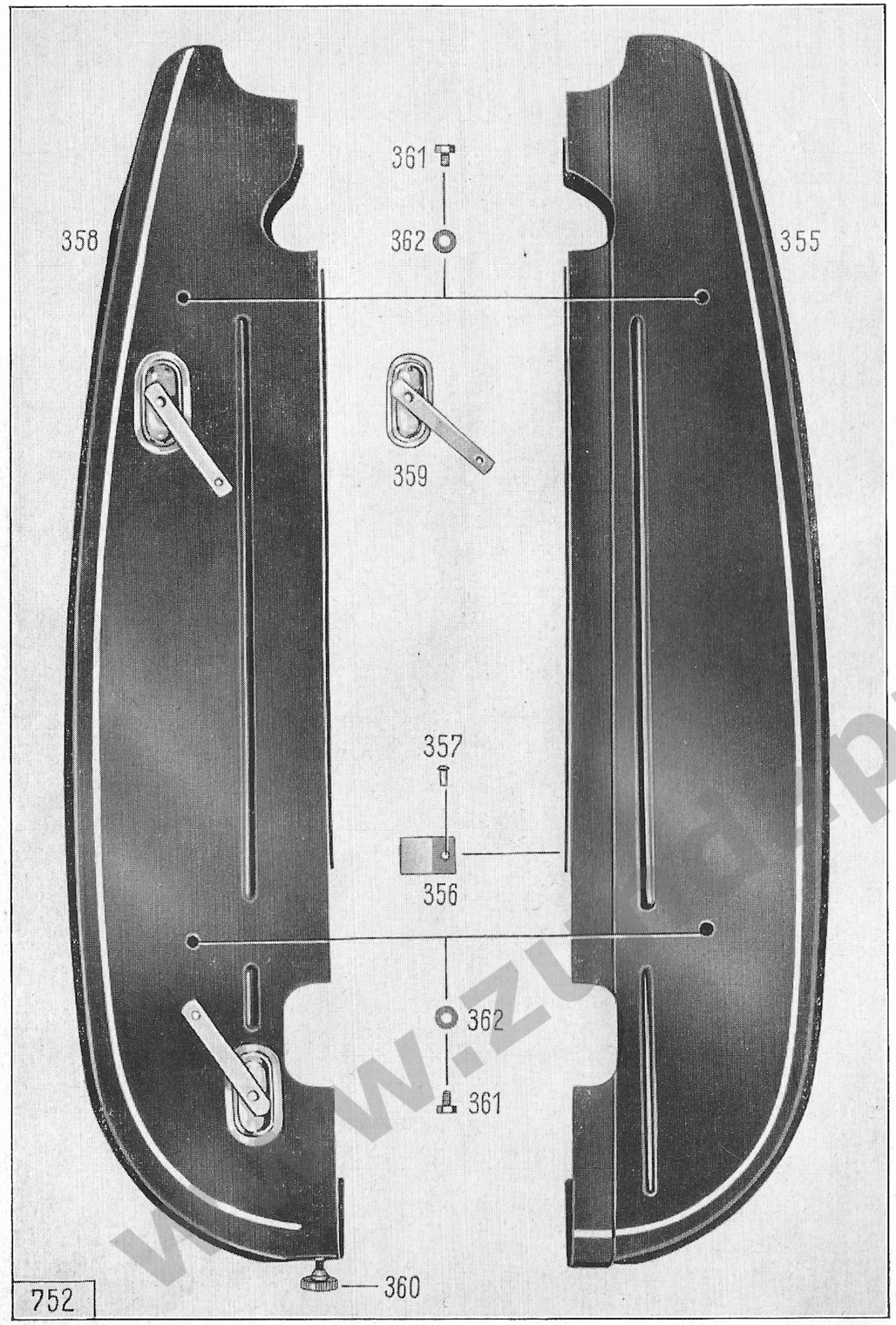

Key No.	Spare Part No.	Description	No. of Pieces	Remarks
		Chaincase		
355	1500 z 282-0	chaincase, upper part	1	
356	331 z 330-0	laminated spring	4	
357	—	rivet, button head, 4 × 6 DIN 660	4	
358	1500 z 285-0	chaincase, lower part	1	
359	230 z 230-0	cap	2	
—	331 z 303	laminated spring	2	
—	—	rivet, button head, 4 × 6 DIN 660 Alu (to fasten laminated spring to cap as well as to chaincase, lower part)	4	
—	—	spring washer B 5 DIN 137 k	2	
—	—	washer 4,3 DIN 125 k	2	
360	1021 z 103	knurled edge nut	1	
361	—	hex screw M 6 × 8 DIN 933 k (to fasten chaincase to swinging fork)	4	
362	—	spring washer B 6 DIN 137 k	4	

www.zuidelijkeppveteranenclub.nl

Key No.	Spare Part No.	Description	No. of Pieces	Remarks
		Fuel Tank		
376	6230 z 145-9	fuel tank	1	
377	2210 z 30	fuel sieve	1	
378	1850 z 26	filler cap	1	
379	2456 k 4-0	packing washer (to filler cap)	1	
380	1483 z 64-3	manufacturer's plate	2	
381	—	screw, countersunk raised head, AM 3 × 6 DIN 91 Alu elox. (for fixing the plates)	4	
382	1141 z 2119-2	bracket, left-hand	1	
—	1141 z 2120-2	bracket, right-hand	1	
—	—	screw, fillister head, AM 4 × 5 DIN 85 k (to fasten bracket to fuel tank)	4	
—	—	spring washer A 4 DIN 137 k	4	
383	616 z 248-0	knee pad, left-hand	1	
—	616 z 249-0	knee pad, right-hand	1	
384	1146 z 54	front rubber plate	1	
385	1126 z 2	support (mushroom-shaped)	1	
386	1126 z 3	support (mushroom-shaped)	3	
—	1301 z 662	compensating shim	as required	
387	1146 z 55	rear rubber plate	1	
388	616 z 210	rubber sleeve	2	
389	—	hose clip "Beru", WSN 5	1	
390	—	hose band "Beru", 5 × 300 mm	1	
		Fuel Tap		
391	6010 z 165-0	fuel tap	1	
—	2303 k 4-0	toggle (to fuel tap)	1	
—	—	cylindrical screw M 5 × 40 DIN 84 (to toggle)	1	
392	—	packing washer A 10 × 14 DIN 7603	1	
393	1001 z 55	nut	1	
		Fuel Pipes		
394	—	fuel hose A 5 × 9 × 90 DIN 73 379	1	

www.zundappveteranenclub.nl

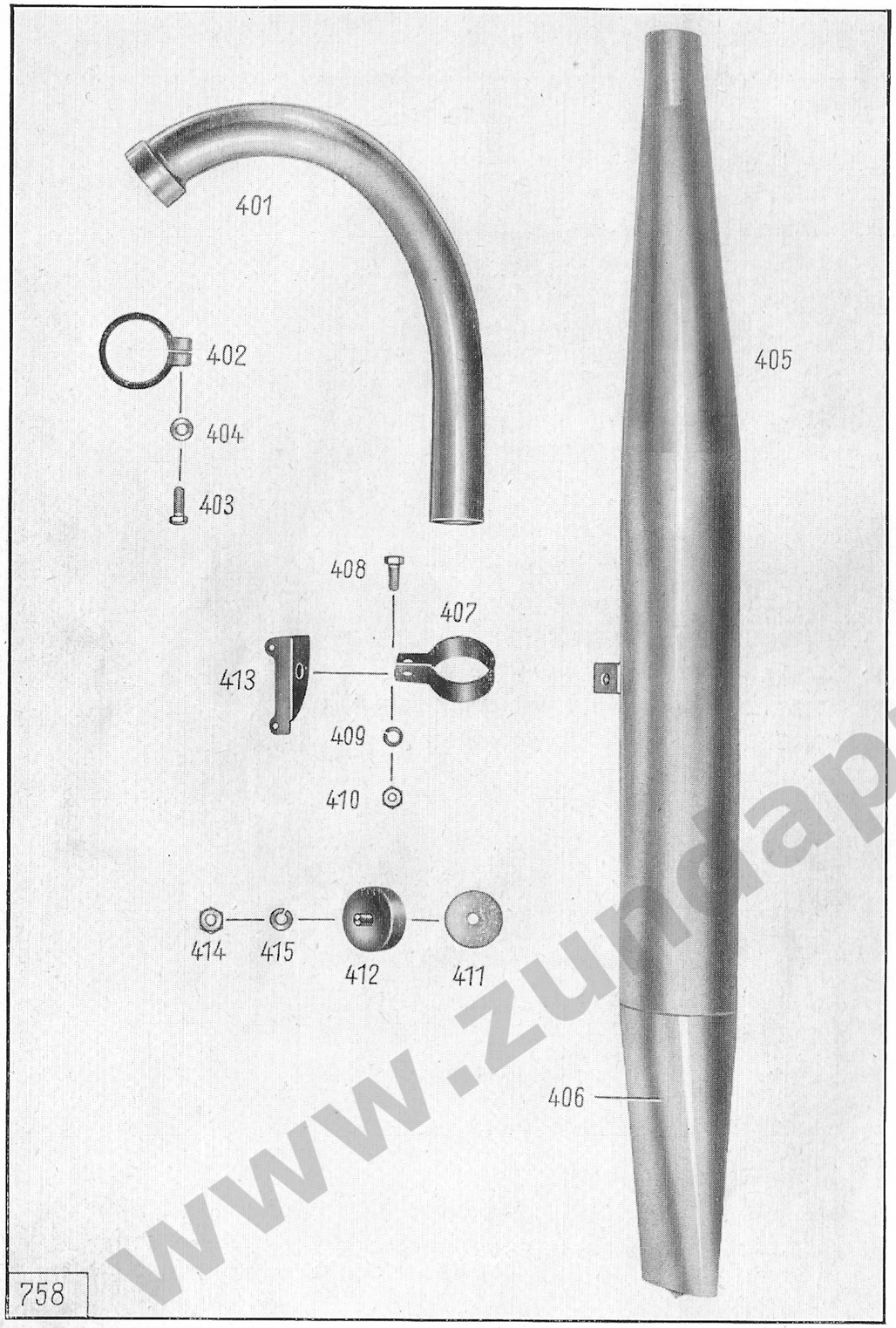

Key No.	Spare Part No.	Description	No. of Pieces	Remarks
		Exhaust Set		
401	1351 z 208-4	exhaust pipe	1	
402	1241 z 367-2	clamping ring (to fasten exhaust pipe to cylinder)	1	
403	—	hex screw M 8 × 25 DIN 931 k	1	
404	—	spring washer A 8 DIN 137	1	
405	6030 z 330-4	silencer	1	
406	2271 k 24-4	silencer-end piece	1	
413	1140 z 1266-8	bracket (to silencer)	1	
407	1441 z 320-0	clamp (to fasten silencer to exhaust pipe)	1	
408	—	hex screw M 8 × 22 DIN 933 k (to clamp)	1	
409	—	spring washer A 8 DIN 127 k	1	
410	—	hex nut M 8 DIN 934 (to clamp)	1	
411	1289 z 102	insulating washer	1	
412	600 z 1-0	damper (against metal vibration)	1	
414	—	hex nut M 10 DIN 934 k (to fasten silencer to strut tube)	1	
415	—	spring washer A 10 DIN 127 k	1	

www.zundappveteranenclub.nl

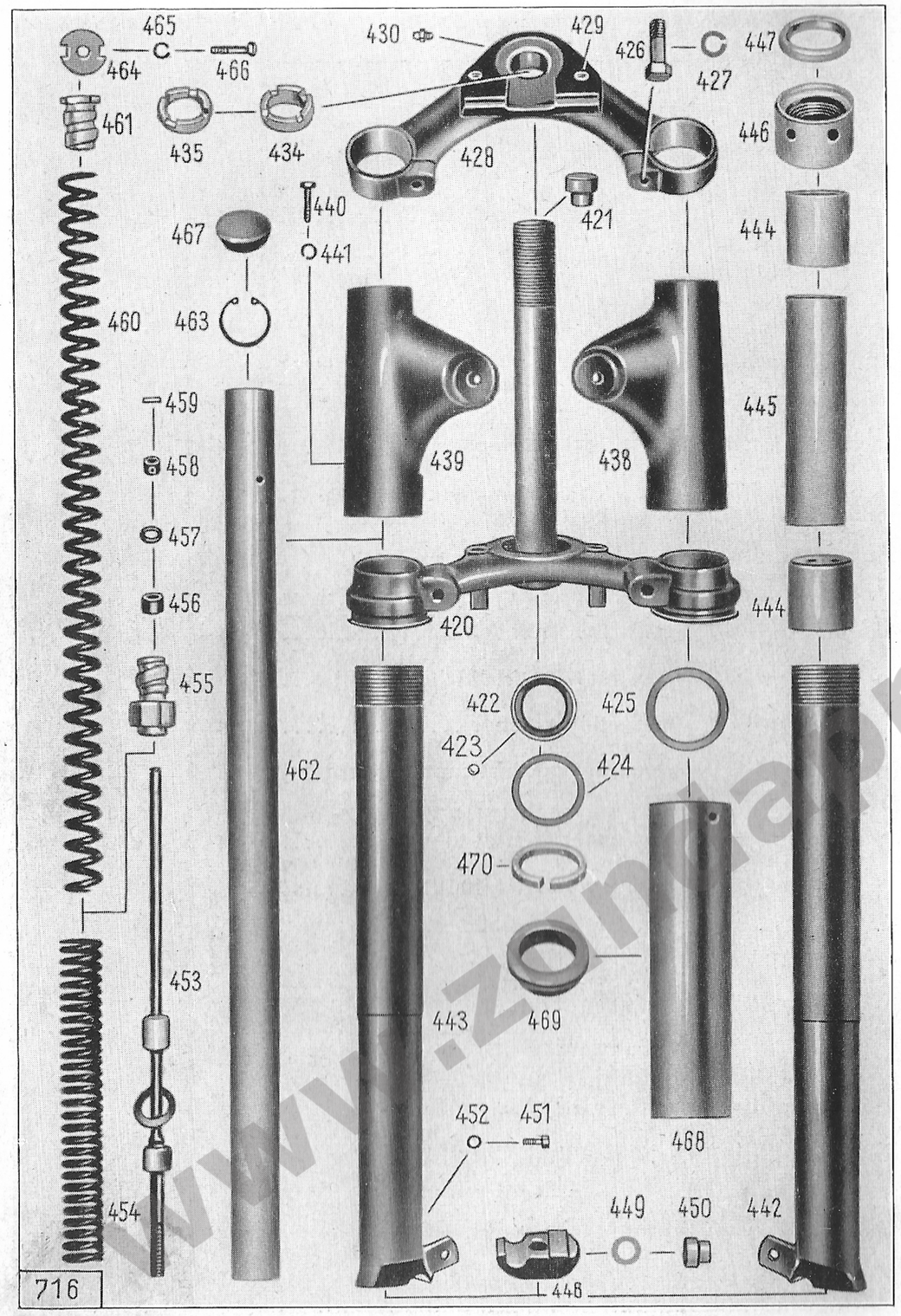

Key No.	Spare Part No.	Description	No. of Pieces	Remarks
		Front Fork		
—	6810 z 20-0	front fork with steering damper ..	1	
		Front Fork Suspension		
420	1210 z 153-8	fork connecting member, lower (with fork shank)	1	
—	121 z 457	guide bolt	2	
421	616 z 262-0	rubber sleeve (to steering damper)	1	
422	1871 z 156	fork race	1	
423	—	ball 6 mm III DIN 5401	18	
424	1236 z 4	felt washer	1	
425	1236 z 209	rubber ring (to lower fork connecting member)	2	
426	—	hex screw M 10 × 30 DIN 931 k (to fasten fork tubes in fork connecting member)	2	
427	—	spring washer A 10 DIN 127 k	2	
428	1201 z 314-8	fork connecting member, upper ..	1	
430	1080 z 1	grease nipple (in upper fork connecting member)	1	
422	1871 z 156	fork race	1	
423	—	ball 6 mm III DIN 5401	18	
424	1236 z 4	felt washer	1	
434	1011 z 204-3	slot nut, tapered (to fasten fork connecting members to frame)..	1	
435	1011 z 89	slot nut	1	
426	—	hex screw M 10 × 30 DIN 931 k (to fasten fork tubes in fork connecting member)	2	
427	—	spring washer A 10 DIN 127 k	2	
438	630 z 476-8	headlight carrier, left-hand	1	
439	630 z 477-8	headlight carrier, right-hand	1	
440	—	hex screw M 6 × 20 DIN 931 a (to fasten headlight carrier to fork connecting member)	2	
441	—	spring washer A 6 DIN 127 k	2	

www.zondaspveteranenclub.nl

Key No.	Spare Part No.	Description	No. of Pieces	Remarks
		Fork Legs		
442	200 z 103-8	fork guide tube, left-hand	1	
443	200 z 104-8	fork guide tube, right-hand	1	
444	180 z 16	sliding bushing (to fork guide tubes)	4	
445	1333 z 59-0	spacer tube (to fork guide tubes)	2	
446	171 z 158	threaded bushing (on fork guide tubes)	2	
447	6860 z 81	packing ring (in threaded bushing)	2	
448	200 z 105-8	shoe (to fasten front wheel axle)	2	
449	—	spring washer B 10 DIN 137 k	4	
450	1001 z 118	collar nut (to hex screw)	2	
451	—	hex screw M 6 × 12 DIN 933 k (oil draining screw)	2	
452	—	packing washer A 6 × 10 DIN 7603 Alu	2	
453	1650 k 119-0	guide rod	2	
454	321 z 271	pressure spring, short	2	
—	1301 z 1051-2	washer	2	
455	633 z 7	spring carrier (to guide rod)	2	
456	1236 z 208	rubber ring (to guide rod)	2	
457	—	washer 8,4 DIN 433	2	
458	1231 z 201	fixing ring (to guide rod)	2	
459	—	pin 3 × 12 DIN 1473 (to fixing ring)	2	
460	321 z 272	pressure spring, long	2	
461	633 z 6	spring carrier (to long pressure spring)	2	

Key No.	Spare Part No.	Description	No. of Pieces	Remarks
462	1331 z 832-4	fork tube	2	
463	—	circlip 30 × 1,2 DIN 472 (in fork tube)	2	
464	1301 z 361	washer (to spring carrier)	2	
465	—	spring washer A 6 DIN 127 k	2	
466	—	cylindrical screw M 6 × 25 DIN 84 (to fasten spring carrier in fork tube)	2	
467	616 z 78	plug (to fork tube)	2	
468	1331 z 717	protective sleeve (to lower fork connecting member)	2	
469	1236 z 210	rubber ring (in protective sleeve)	2	
—	1396 z 242-0	profile rubber	2	

www.zundappveteranenclub.nl

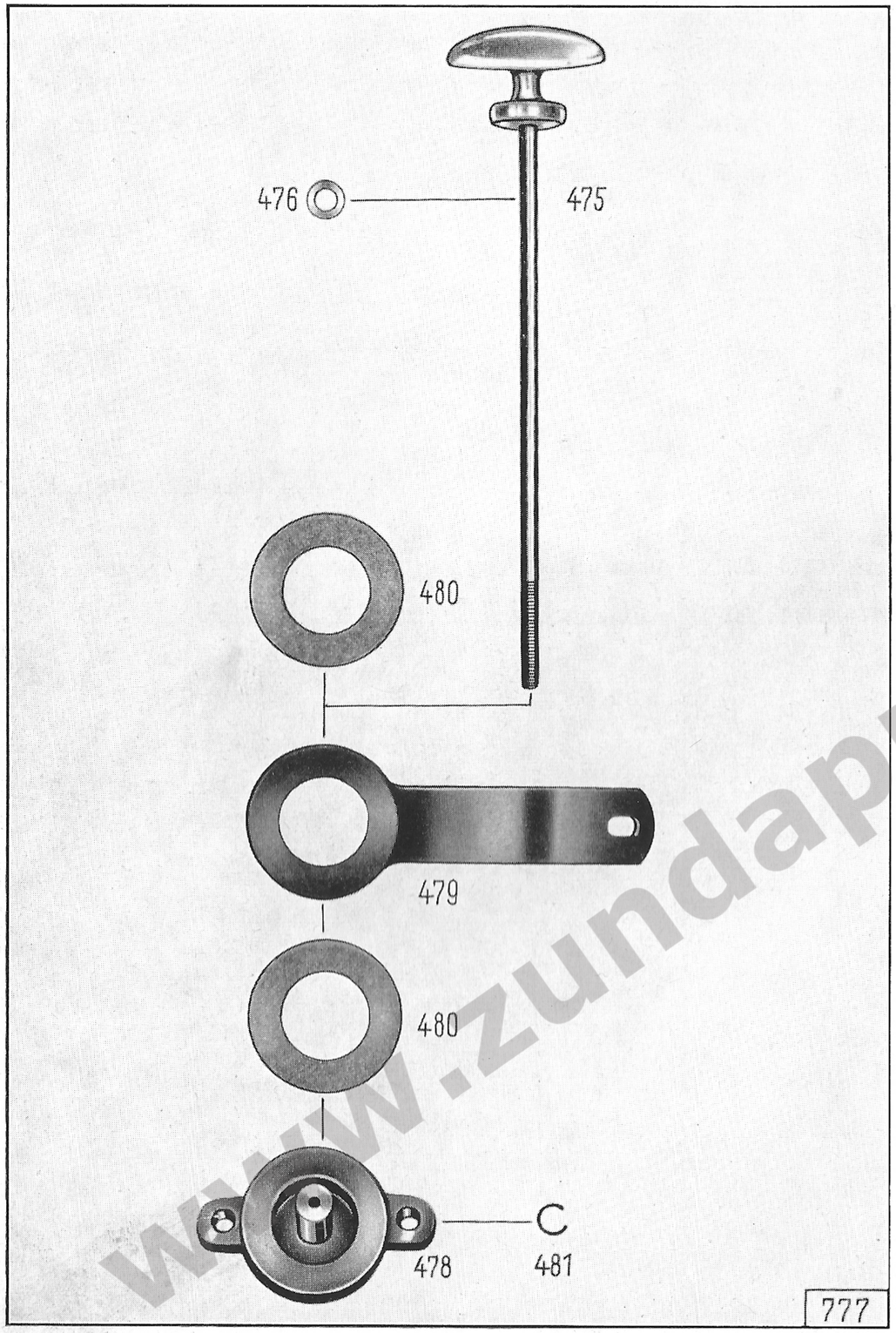

Key No.	Spare Part No.	Description	No. of Pieces	Remarks
		Steering Damper		
475	590 z 108-0	handle with bolt	1	
476	—	spring washer A 8 DIN 137 k	4	
478	631 z 242	spanner piece	1	
479	631 z 606-2	spanner plate	1	
480	1289 z 15	damper washer	2	
481	—	snap ring 10 DIN 9045 (on guide bolt)	2	

www.zundappveteranenclub.nl

Illustration 21, Group R: k) Handlebar and Handlevers with Cables

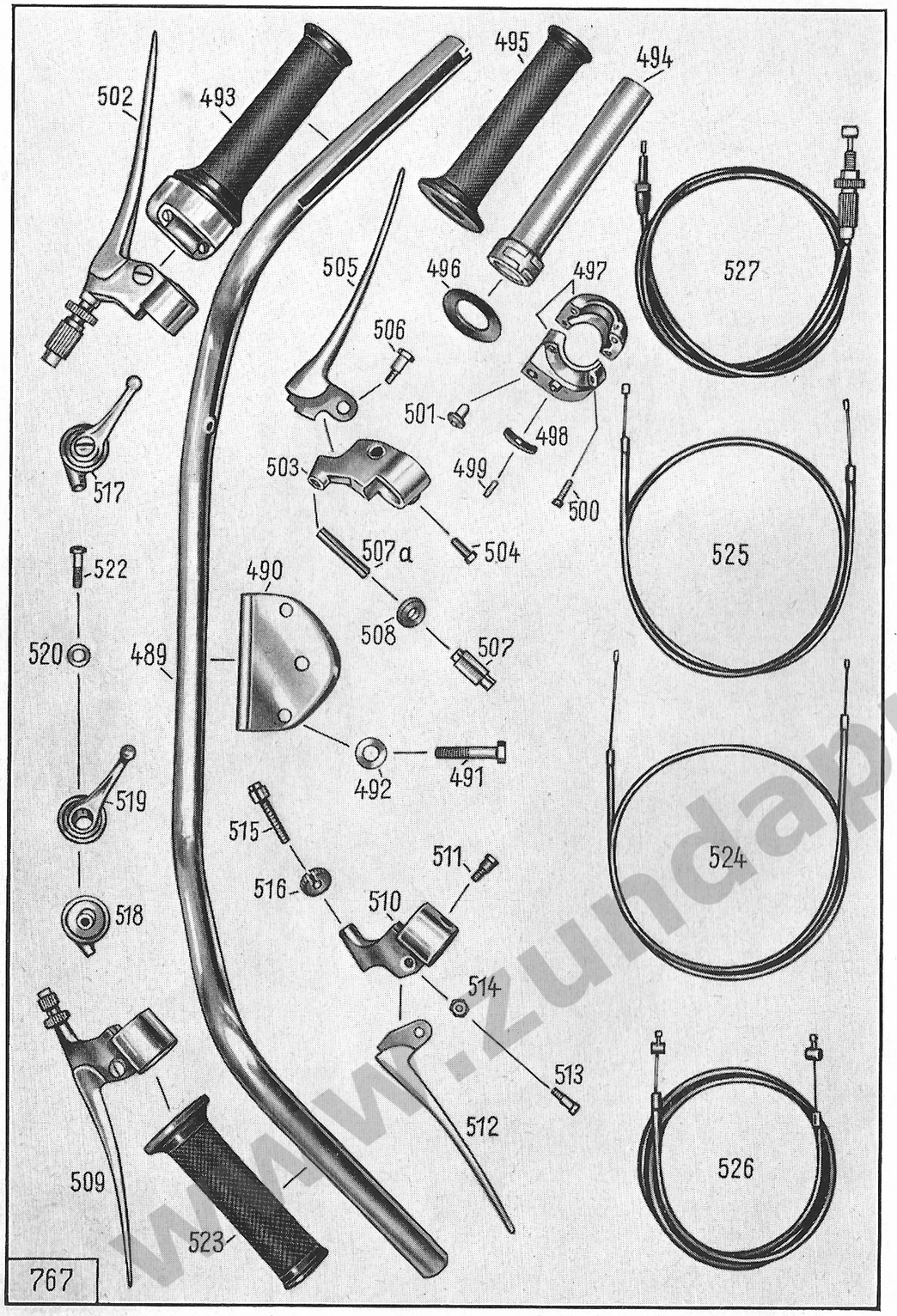

Illustration 21, Group R: k) Handlebar and Handlevers with Cables

Key No.	Spare Part No.	Description	No. of Pieces	Remarks
		Handlebar		
489	1370 z 253-4	handlebar	1	
490	783 z 20	spanner cap	1	
491	—	hex screw M 8 × 40 DIN 931 crp	2	
492	—	spring washer A 8 DIN 137 k	4	
		Handlevers		
493	170 z 217	throttle twist grip	1	colour of rubber = black
494	2250 k 6-0	grip tube with segment ring	1	
495	2256 k 6-0	rubber sleeve	1	colour of rubber = black
496	2251 k 10-0	washer	1	
497	2250 k 8-0	housing (upper and lower part)	1	
498	2251 k 13-0	brake spring	1	
499	2251 k 14-0	adjusting screw	1	
500	2251 k 12-3	screw, fillister head	2	
501	2251 k 15-0	cable support	1	
502	670 z 210	brake lever with cable adjustment	1	
503	2263 k 22-0	joining piece	1	
504	2261 k 4-3	screw, fillister head	1	
505	2263 k 23-0	brake lever	1	
506	2261 k 5-4	lever screw	1	
—	—	hex nut M 6 DIN 934 crp	1	
507	2263 k 24-0	adjusting nut	1	
507a	2261 k 24-0	threaded bolt	1	
508	2263 k 25-0	knurled edge nut	1	
—	2261 k 25-3	hex nut	1	
509	670 z 213	clutch lever with cable adjustment	1	
510	2263 k 1-0	joining piece	1	
511	2261 k 4-3	screw, fillister head (to joining piece)	1	
512	2263 k 8-0	clutch lever	1	
513	2261 k 7-3	lever screw	1	
514	—	hex nut M 5 DIN 934 crp	1	
515	2261 k 6-5	adjusting screw	1	
516	2263 k 7-0	knurled edge nut	1	
517	670 z 226-0	air lever	1	

www.zundappveteranenclub.nl

Illustration 21, Group R: k) Handlebar and Handlevers with Cables

Key No.	Spare Part No.	Description	No. of Pieces	Remarks
518	2263 k 29-0	housing	1	
519	2263 k 28-4	air lever	1	
520	2263 k 27-0	washer	1	
—	2261 k 23-0	pressure spring	1	
522	2261 k 21-4	screw, fillister head	1	
523	616 z 232	grip	1	colour of rubber = black
		Cables		
524	6290 k 446-0	cable for carburettor	1	
—	—	nipple C DIN 71 988	2	
—	—	sleeve C 2,5 DIN 71 987	2	
—	144 k 28-0	nipple	1	
525	6290 z 448-0	cable for air lever	1	
—	—	nipple C DIN 71 988	2	
—	—	sleeve C 2,5 DIN 71 987	2	
526	6290 z 447-0	cable for clutch	1	
—	—	nipple seat A DIN 71 988	2	
—	—	nipple B 2,3 DIN 71 988	2	
—	—	sleeve C 3 DIN 71 987	2	
—	1063 z 7-0	nipple	1	
527	6290 k 449-0	cable for front brake	1	
—	144 z 04	cable end	1	
—	—	nipple seat A DIN 71 988	1	
—	—	nipple B 2,3 DIN 71 988	1	
—	—	sleeve C 3 DIN 71 987	2	
—	551 z 108	yoke	1	
—	131 z 516	bolt (to yoke)	1	
—	—	split pin 1,5 × 15 DIN 94	1	
—	1391 z 168	cable band (to fasten front brake cable to speedometer cable)	2	

www.zundappveteranenclub.nl

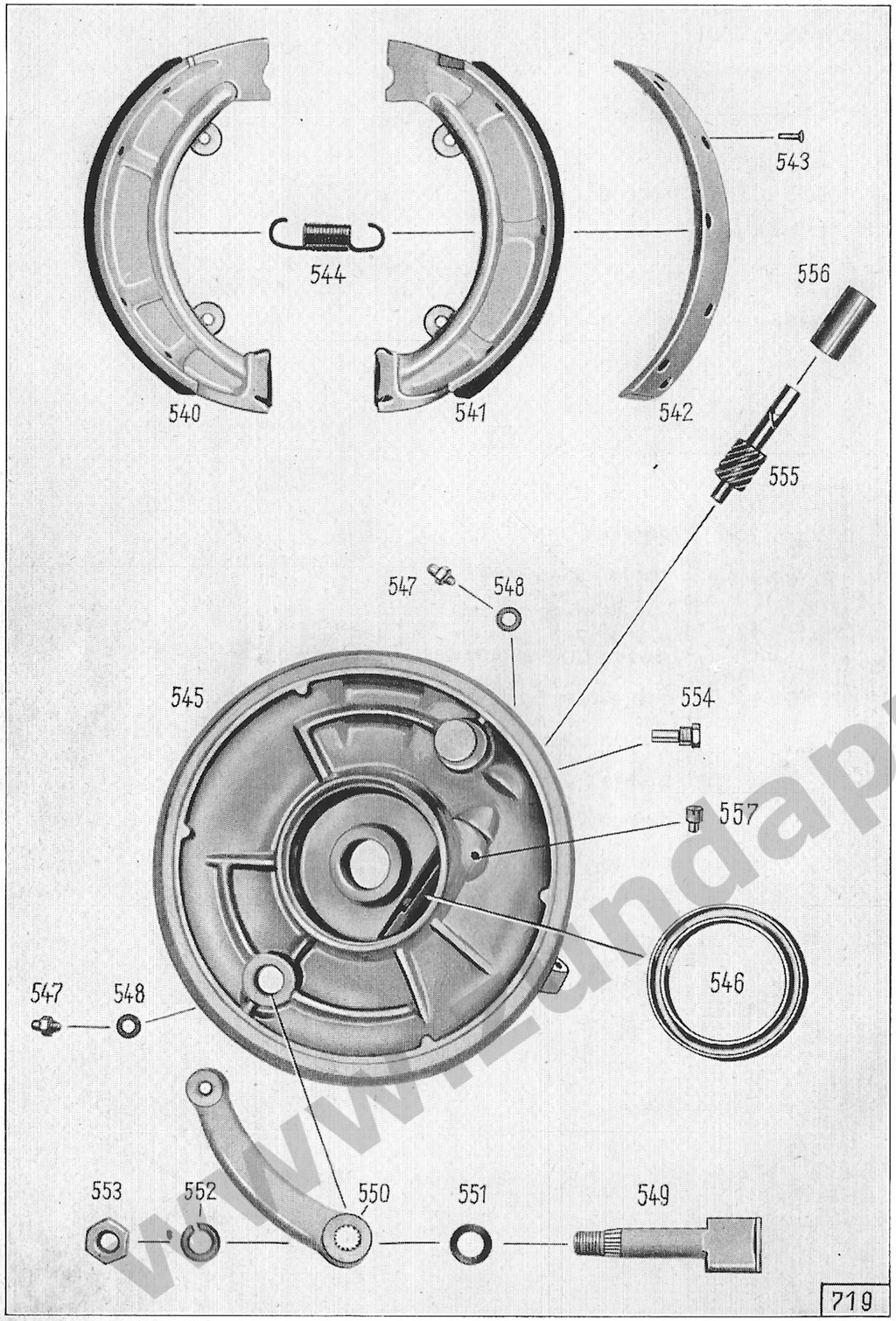

Key No.	Spare Part No.	Description	No. of Pieces	Remarks
		Handbrake		
540	20 k 102	brake shoe with lining, left-hand ..	1	
541	20 k 103	brake shoe with lining, right-hand .	1	
542	49 k 103	brake lining	2	
543	1044 z 11	cylindrical rivet	14	
544	321 z 310	return spring (between brake shoes)	2	
545	230 z 228-0	brake cover	1	
546	—	radial gasket (oil seal) A 50 × 65 DIN 6503	1	
547	1080 z 1	grease nipple	2	
548	—	packing washer A 6 × 10 DIN 7603 Alu	2	
549	1100 z 8	brake cam	1	
550	671 z 324	brake lever	1	
551	1236 z 06	rubber sleeve (between brake lever and brake cover)	1	
552	—	spring washer A 10 DIN 127 k	1	
553	—	hex nut M 10 DIN 934 k	1	
554	1551 z 17	hex screw (to fasten drive cable to brake cover)	1	
—	—	washer 8,4 DIN 433 k	1	
555	2121 z 6	screw pinion	1	
556	182 z 301-0	bushing (to screw pinion)	1	
557	—	threaded pin M 6 × 4 × 2,5 DIN 926 (to fasten bushing)	1	

www.lundappveteranenclub.nl

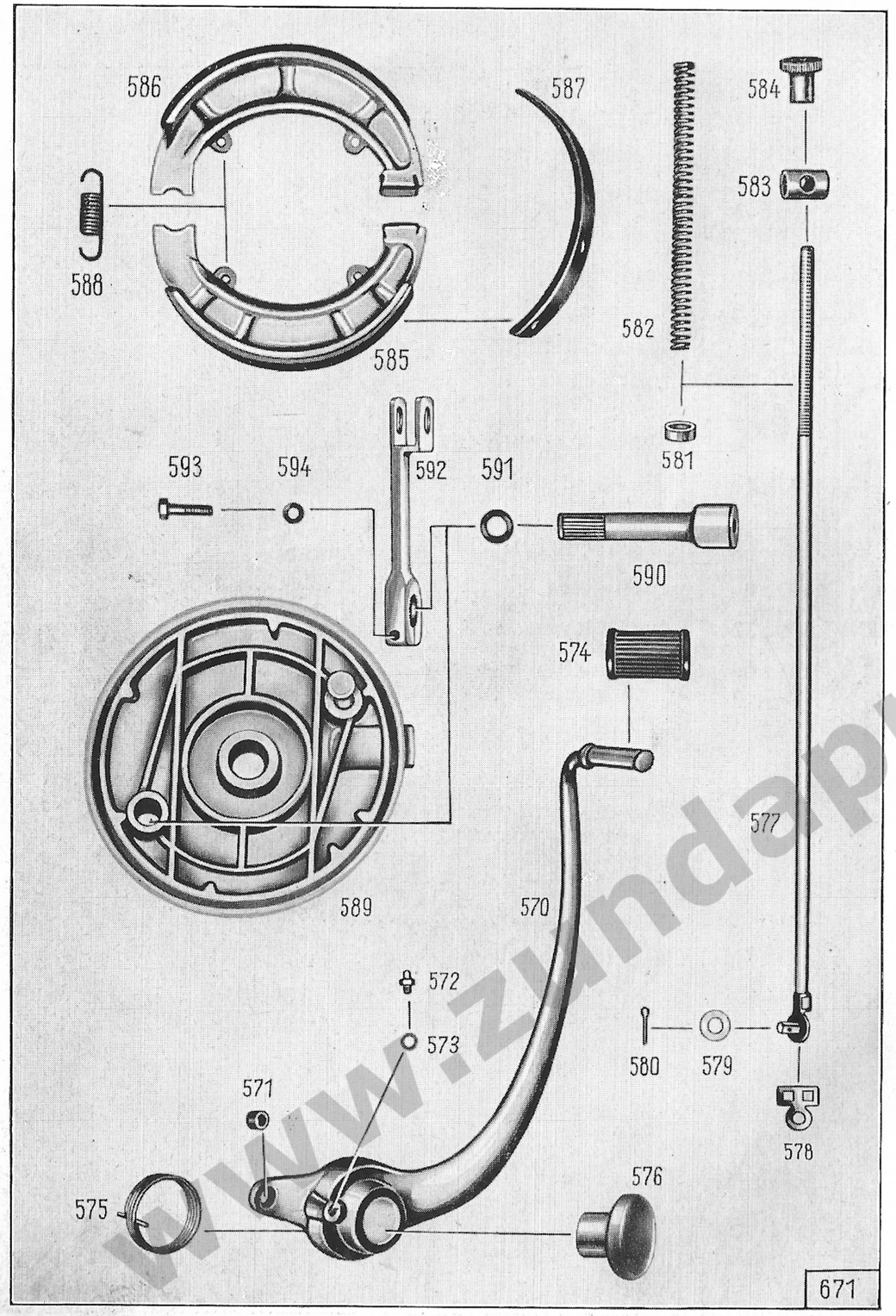

Key No.	Spare Part No.	Description	No. of Pieces	Remarks
		Footbrake		
570	700 z 123-0	footbrake lever	1	
571	181 z 361	bushing (in footbrake lever)	1	
572	1080 z 1	grease nipple	1	
573	—	packing washer A 6 × 10 DIN 7603	1	
574	—	rubber sleeve B DIN 73 483	1	
575	321 z 532	return spring	1	
576	—	lock screw M 20 × 1,5 DIN 908 k	1	
—	1301 z 1008-3	spacer washer	1	
577	1650 k 120-0	footbrake rod with stop clamp	1	
578	1441 z 308-2	stop clamp	1	
579	—	washer 7,4 DIN 125 k	1	
580	—	split pin 2 × 15 DIN 94 k	1	
581	1241 z 358-3	ring	1	
582	321 z 512-3	spiral spring	1	
583	121 z 1117-3	brake lever pin	1	
584	1023 z 102-0	knurled edge nut (to fasten brake rod to rear brake lever)	1	
585	20 k 102	brake shoe with lining, left-hand	1	
586	20 k 103	brake shoe with lining, right-hand	1	
587	49 k 103	brake lining	2	
—	1044 z 11	cylindrical rivet	14	
588	321 z 310	return spring (between brake shoes)	2	
589	230 z 243-0	brake cover	1	

www.zundappveteranenclub.nl

Illustration 23, Group B: a) Brakes, Footbrake

Key No.	Spare Part No.	Description	No. of Pieces	Remarks
—	—	hex screw M 6 × 55 DIN 933 k (for chain tightening in brake cover, right-hand side)	1	
—	—	hex nut M 6 DIN 934 k	1	
—	1080 z 1	grease nipple	1	
590	1100 z 105	brake cam	1	
591	1236 z 06	rubber sleeve (on brake cam)	1	
592	671 z 337-3	brake lever	1	
593	—	hex screw M 6 × 20 DIN 931 k (to fasten brake lever to brake cam)	1	
594	—	spring washer A 6 DIN 127 k	1	

www.zundappveteranenclub.nl

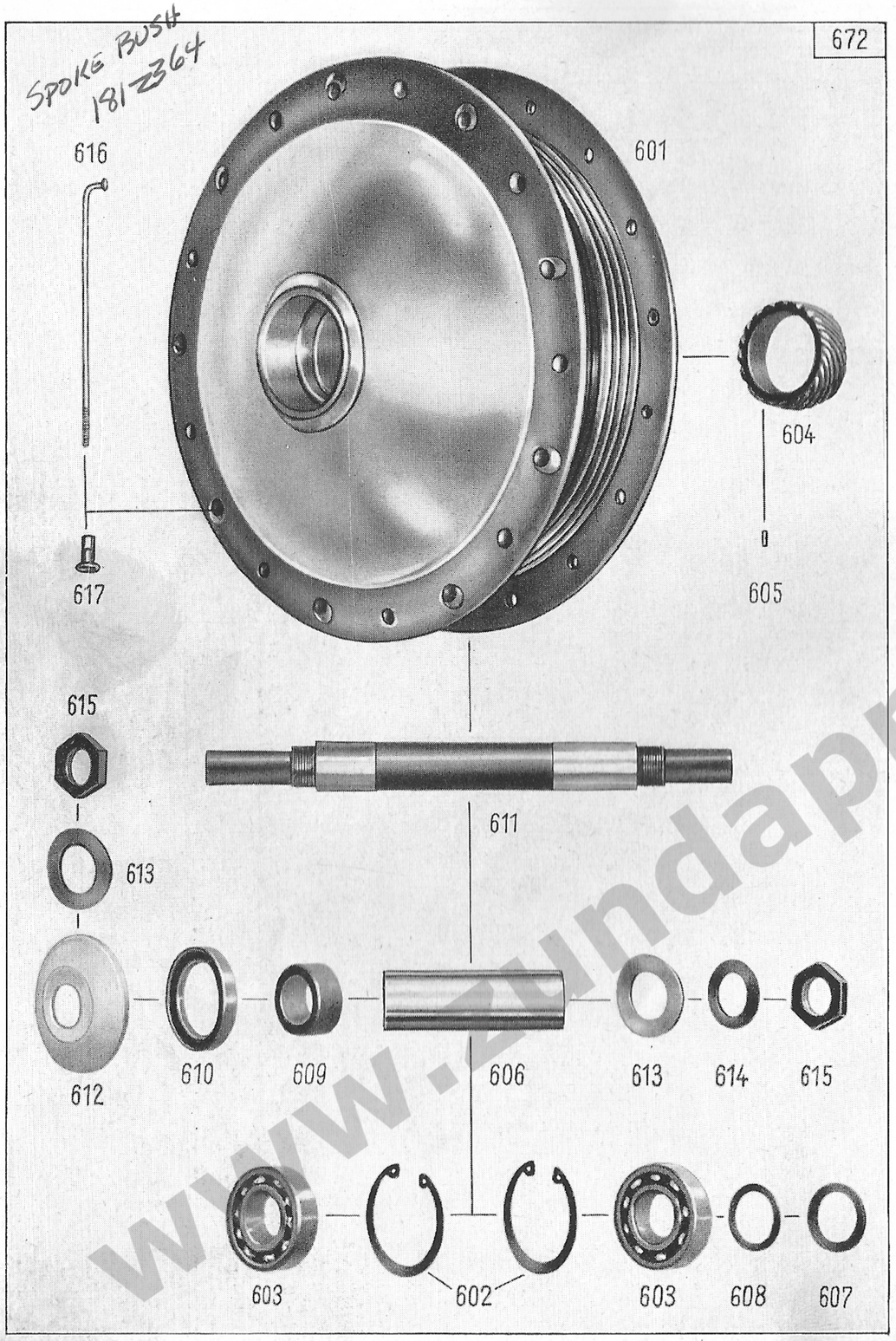

Key No.	Spare Part No.	Description	No. of Pieces	Remarks
		Front Wheel		
—	6660 k 220-0	front wheel without tyre	1	
—	6620 z 206-0	front wheel hub	1	
601	483 z 312-0	hub shell	1	
602	—	circlip 42 × 1,75 DIN 472	2	
603	—	ball bearing 6004 DIN 625	2	
604	2121 z 73-0	screw gear	1	
605	—	pin 3 × 6 DIN 1473 (to fasten screw gear in hub shell)	1	
606	1331 z 826-0	distance tube	1	
607	1301 z 1021-0	distance washer (side of brake cover)	1	
608	1301 z 181	compensating shim, thickness 0,8 mm (between distance washer and front brake cover)	as required	
609	181 z 334-6	distance bushing	1	
610	—	radial gasket (oil seal) A 30 × 42 DIN 6503	1	
611	121 z 1089-2	front wheel axle	1	
612	781 z 415-2	covering washer (left-hand side)..	1	
613	—	spring washer B 18 DIN 137 k	2	
614	1301 z 376	shim } betw. spring washer and distance nut, right-hand side	as required	
—	1301 z 377	shim } betw. spring washer and distance nut, right-hand side		
615	1001 z 67	distance nut	2	
—	361 z 107-4	rim	1	
616	401 z 205-3	spoke 4 × 130,5 mm	36	
617	411 z 101-3	nipple	36	

www.zundappveteranenclub.nl

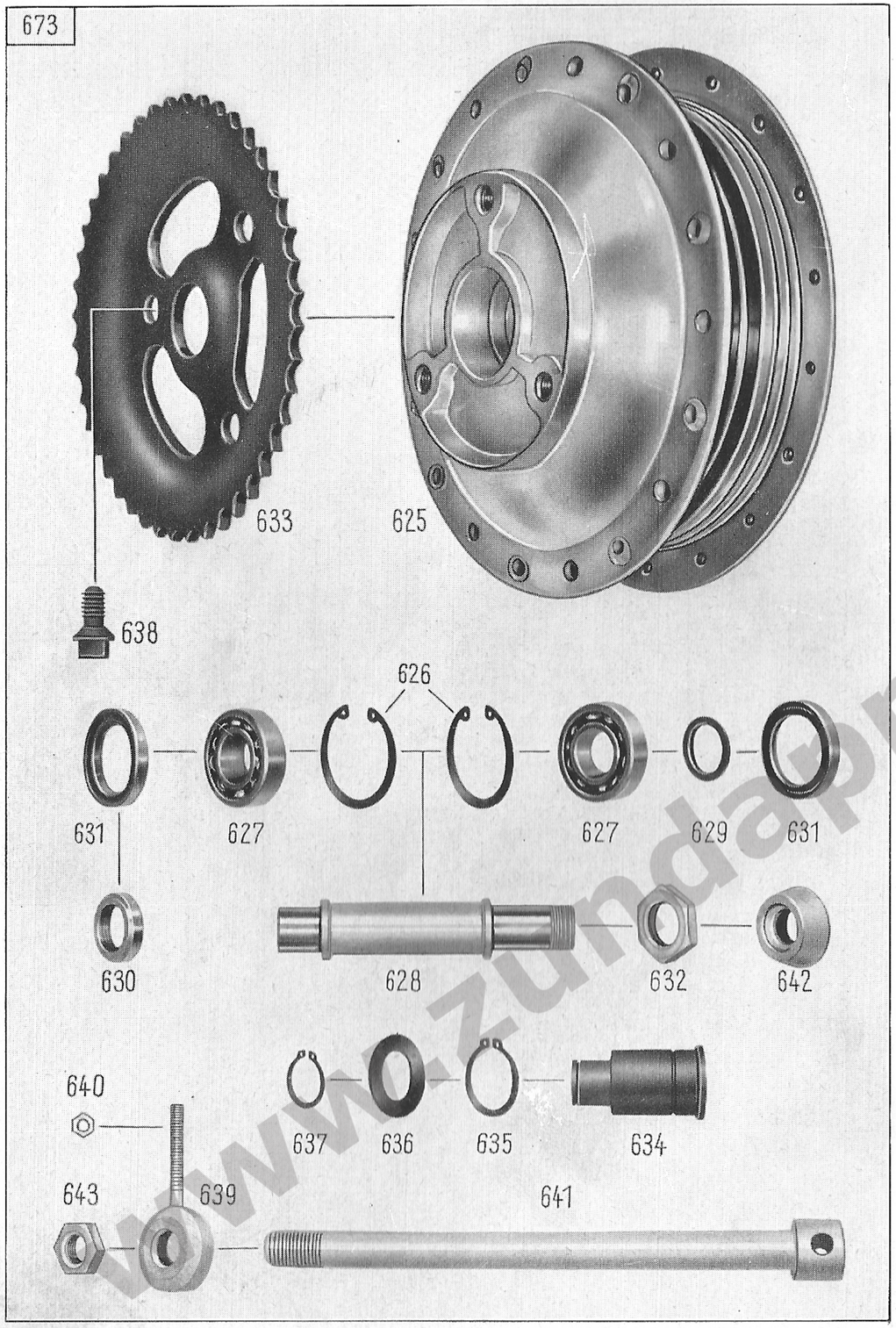

Key No.	Spare Part No.	Description	No. of Pieces	Remarks
		Rear Wheel		
—	6660 k 227-0	rear wheel without tyre	1	
—	6620 k 221-0	rear wheel hub	1	
625	483 z 325-0	hub shell	1	
—	181 z 364-3	bushing	36	
626	—	circlip 42 × 1,75 DIN 472	2	
627	—	ball bearing 6004 DIN 625	2	
628	121 z 1090-6	axle tube	1	
629	1301 z 1008-0	distance washer (side of brake cover)	1	
630	181 z 333-0	distance bushing (side of toothed wheel rim)	1	
631	—	radial gasket (oil seal) A 30 × 42 × 7 DIN 6503	2	
632	1001 z 215	hex nut (to fasten brake cover to hub shell)	1	
—	361 z 107-4	rim	1	
—	401 z 205-3	spoke 4 × 130,5 mm	36	
—	411 z 101-3	nipple	36	
633	2071 z 216-2	toothed wheel rim, 44 teeth	1	for solowork
634	181 z 335-2	retaining bushing	1	
635	—	circlip 28 × 1,5 DIN 471	1	
636	1301 z 672	washer	1	
—	1281 z 32	washer	1	
637	—	circlip 20 × 1,2 DIN 471	1	
638	1551 z 429	square screw (to fasten toothed wheel rim to rear wheel)	3	
639	1110 k 201	chain tightener, left-hand	1	
640	—	hex nut M 6 DIN 934 k	2	
641	131 z 533-3	rear wheel axle	1	
642	1241 z 352-3	distance ring	1	
—	—	washer 15 DIN 125 k	1	

www.zundappveteranenclub.nl

www.zundappveteranenclub.nl

Illustration 25, Group B: b) Wheels, Rear Wheel

Key No.	Spare Part No.	Description	No. of Pieces	Remarks
643	—	hex nut M 14 × 1,5 DIN 936 k (to rear wheel axle)	1	
—	—	roller chain 116 links incl. lock 1 × 12,7 × 7,75 DIN 8180	1	
—	—	cranked double link 1 D 12,7 × 7,75 DIN 8180	1	
—	—	lock 1 E 12,7 × 7,75 DIN 8180	1	

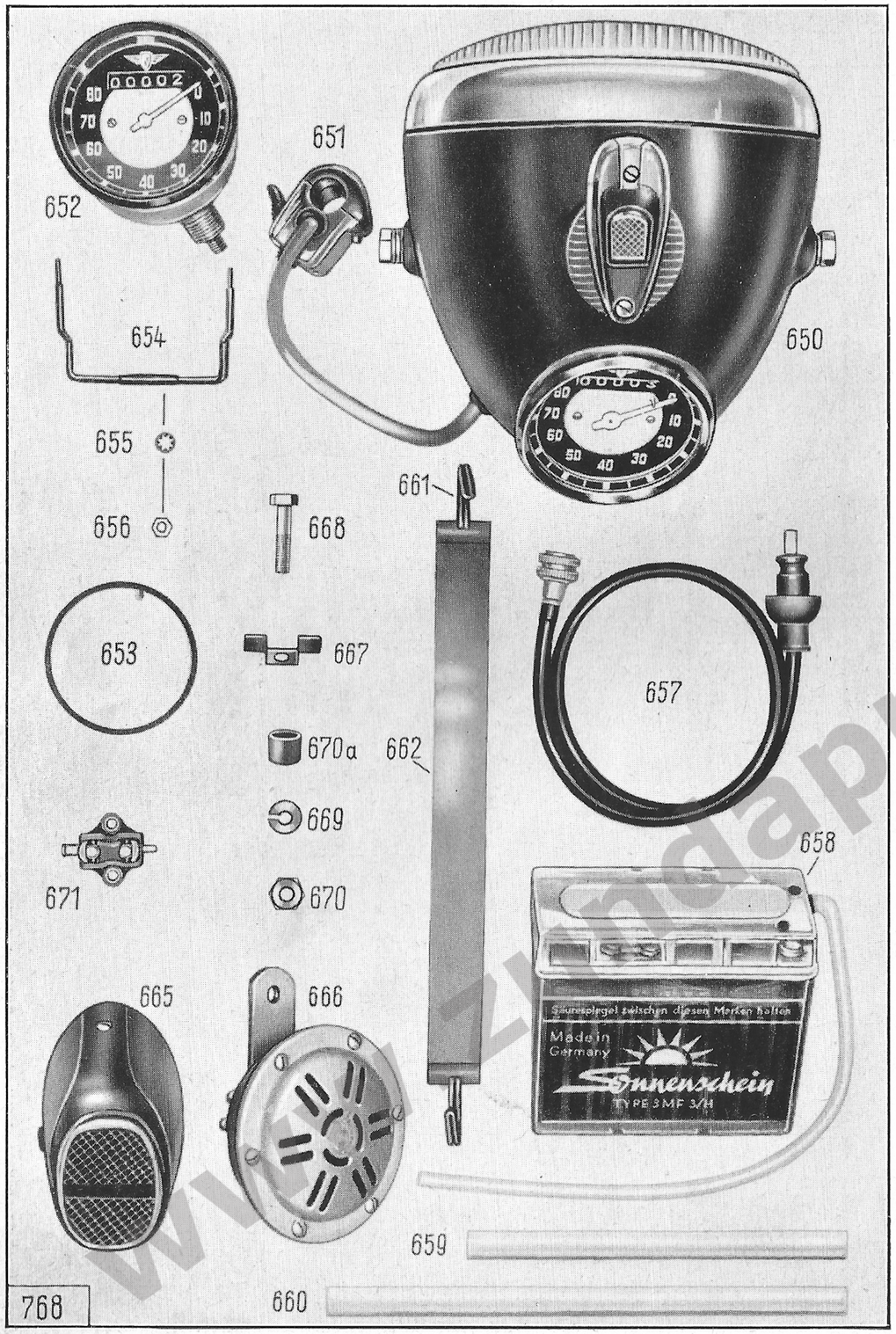

Key No.	Spare Part No.	Description	No. of Pieces	Remarks
		Headlight		
650	6090 z 112-8	headlight complete with dip switch, ignition key, without bulbs, speedometer, and conducts	1	
—	2310 k 32-8	headlight housing	1	
—	2316 k 3-0	plug (for speedometer cable passage which is, however, not used)	1	
—	2310 k 14-0	reflector	1	
—	2311 k 30-4	lock rim with screw	1	
—	2317 k 3-0	headlight glass	1	
—	2316 k 4-0	sealing rim (to headlight glass)	1	
—	2311 k 39-3	retaining spring (to headlight glass)	6	
—	2310 k 53-0	ignition-light switch	1	
—	2310 k 55-0	retaining clip (to ignition-light switch)	1	
—	2340 k 5-0	ignition-light switch cover	1	
—	2311 k 37-4	distance screw, short	1	
—	2311 k 38-4	distance screw, long	1	
—	2310 k 33-0	ignition key	1	
—	—	rubber grommet A DIN 72 613 (for conduct passage)	2	
—	2310 k 18-5	holder (to Bilux bulb)	1	
—	2311 k 23-3	return spring (to holder)	1	
651	6160 z 166	dip switch (on handlebar)	1	
—	2340 k 4-0	set of cables — 4 lines (from dip switch to headlight)	1	
—	2346 k 1-0	rubber grommet (to set of cables)	1	
—	—	Bilux bulb B 6 V 35/35 W DIN 72 601	1	Osram 7324
—	—	parking light bulb H 6 V 2 W DIN 72 601	1	Osram 3895
—	—	charge control bulb J 6 V 1,2 W DIN 72 601	1	Osram 3799
—	—	hex screw M 8 × 22 DIN 931 k (to fasten headlight to headlight carrier)	2	
—	—	spring washer A 8 DIN 127 k	2	

www.zundapp-veteranenclub.nl

Key No.	Spare Part No.	Description	No. of Pieces	Remarks
		Speedometer		
652	6770 z 70-4	speedometer (make VDO) indicating miles	1	
653	2426 k 1-0	rubber ring	1	
—	2424 k 1-0	bulb holder	1	
—	—	bulb J 6 V 1,2 W DIN 72 601	1	Osram 3799
654	2421 k 3-2	retaining clip	1	
655	—	shake-proof (toothed) washer A 5,3 DIN 6797	2	
656	—	hex nut M 5 DIN 934 k	2	
—	6770 z 71-4	speedometer with lighting incorporated (make Veigel), indicating miles	1	
—	2426 k 1-0	rubber ring	1	
—	2424 k 1-0	bulb holder	1	
—	—	bulb J 6 V 1,2 W DIN 72 601	1	Osram 3799
—	2421 k 2-3	fixing angle	2	
—	—	hex nut M 4 DIN 934	2	
—	—	shake-proof (toothed) washer A 4,3 DIN 6797	2	
657	6790 z 104-0	speedometer drive cable	1	
—	—	rubber grommet D DIN 72 613 (to headlight)	1	
—	1806 z 36	rubber grommet (to front wheel hub)	1	
		Battery		
658	6060 z 103-0	battery (terminals inside) 6 V 8 Ah L	1	
659	1396 z 255	rubber lace	2	
660	1396 z 256	rubber lace	1	
661	1111 z 235-2	clasp (to tie)	2	
662	1396 z 257	tie	1	
		Taillight		
665	6110 z 48-8	tail-brake-number plate light	1	
—	2320 k 2-8	cap	1	
—	1146 z 81	rubber plate	1	
—	2320 k 3-0	glass (to cap)	1	
—	—	bulb K 6 V 15 W DIN 72 601 (for brake light)	1	Osram 6452

Key No.	Spare Part No.	Description	No. of Pieces	Remarks
—	—	bulb M 6 V 3 W DIN 72 601 (for tail-number plate-light)	1	Osram 6427
—	—	screw, button head, AM 5 × 15 DIN 86 k	2	
—	—	shake-proof (toothed) washer J 5,3 DIN 6798 k	2	
—	—	hex nut M 5 DIN 934 k	2	
		Horn		
666	—	horn 100 × 6 DIN 72 701	1	
667	2051 z 559-2	bracket	1	
668	—	hex screw M 8 × 30 DIN 933 k (to fasten horn to retaining clip)	1	
669	—	spring washer A 8 DIN 127 k	1	
670	—	hex nut M 8 DIN 934 k	1	
670a	1241 z 13	spacer ring	1	
		Brakelight Pressure Switch		
671	6160 z 158	brakelight pressure switch	1	
—	—	cylindrical screw AM 4 × 15 DIN 84 k (to fasten switch to frame)	2	
—	—	shake-proof (toothed) washer A 4,3 DIN 6797 k	2	
—	—	washer 4,3 DIN 125 k	2	
—	—	hex nut M 4 DIN 934 k	2	
		Electric Conducts Please order cables and sleeves resp. hoses by meters		
—	—	cable B 1,5 DIN 72 551 black		
—	—	cable B 1,5 DIN 72 551 blue		
—	—	cable B 1,5 DIN 72 551 green		
—	—	cable B 1,5 DIN 72 551 red		
—	—	cable B 1,5 DIN 72 551 yellow/green		
—	—	cable B 1,5 DIN 72 551 yellow		
—	760 z 269-0	set of cables (to headlight)	1	
—	—	cable shoe A 5 × 3 DIN 46 211	4	
—	—	cable shoe A 6 × 3,3 DIN 46 211	1	
—	—	rubber hose 10 × 8		
—	—	rubber hose 12 × 10		
—	—	rubber hose 14 × 10		
—	—	rubber hose 14 × 12		
—	1806 z 01	connexion protector	1	

www.zundappveteranenclub.nl

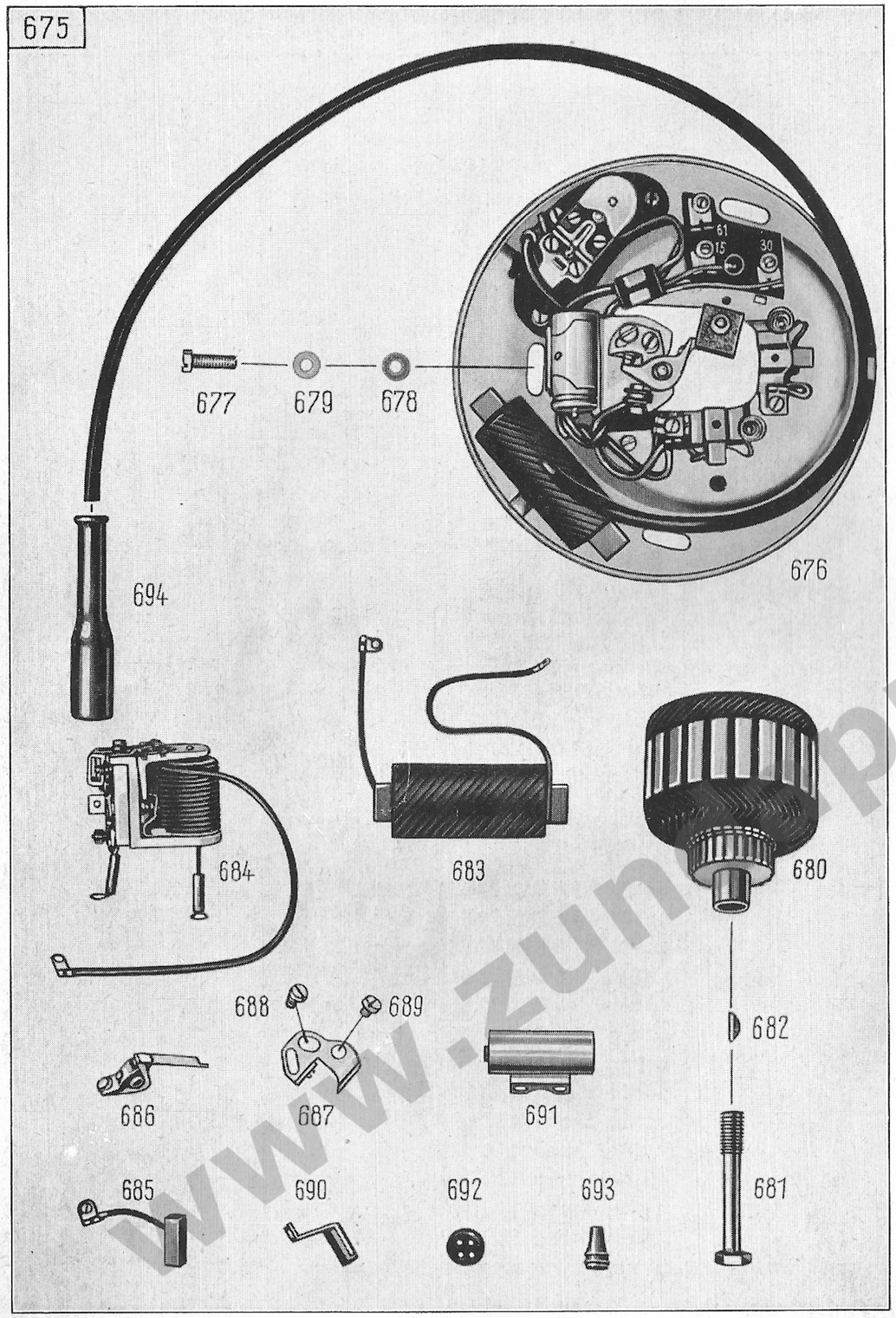

Illustration 27, Group E: a) Electrical Equipment, Battery-Lighting-Ignition Set

Key No.	Spare Part No.	Description	No. of Pieces	Remarks
		Battery-Lighting-Ignition Set		
676	6070 z 209-0	generator, model Noris MLZn 60/6/1600 R	1	
677	—	cylindrical screw AM 6 × 18 DIN 84 k (to fasten generator to crankcase)	3	
678	—	washer 6,4 DIN 125 k	3	
679	—	spring washer B 6 DIN 137 k	3	
680	2290 k 38-0	armature	1	
681	2291 k 19-2	hex screw (to fasten armature to crankshaft)	1	
682	—	key 4 × 5 DIN 6888 (to armature)	1	
683	2290 k 22-0	ignition coil without ignition cable	1	
684	2290 k 29-0	regulator	1	
—	2299 k 1-0	regulator plate	1	
685	2290 k 3-0	carbon brush with cable	2	
686	2290 k 30-6	contact breaker arm with contact	1	
687	2290 k 31-0	contact bracket	1	
688	2291 k 26-3	eccentric screw	1	
689	—	cylindrical screw M 4 × 6 DIN 84 k	1	
690	2290 k 6-0	laminated spring with felt	1	
691	2290 k 7-3	condenser	1	
692	2296 k 8	rubber grommet (for light cable)	1	
693	2296 k 6-0	rubber grommet (for ignition cable)	1	
—	616 z 241	rubber grommet (for set of cables)	1	
—	—	ignition cable 7 mm ϕ × 0,82 mm² DIN 72 561 (please quote length when ordering)	1	
—	1441 z 295	clamp (to ignition cable)	1	
694	6080 k 104	spark plug cover (make Beru)	1	
—	786 k 20-0	water protective cap (side of spark plug)	1	
—	786 z 21-0	water protective cap (side of ignition cable)	1	
—	—	spark plug with packing washer 14 DIN 72 502	1	Bosch W 240 P 11 S or Beru 240/14 u 2 or Lodge H/4

www.zundappveteranenclub.nl

Key No.	Spare Part No.	Description	No. of Pieces	Remarks
		Tools		
—	6890 k 42-0	set of tools with bag	1	
700	6040 z 263	bag for set of tools	1	
701	—	double end spanner 7 × 9 mm DIN 895 k	1	
702	—	double end spanner 8 × 10 mm DIN 895 k	1	
703	—	double end spanner 14 × 17 mm DIN 895 k	1	
704	—	double end spanner 19 × 22 mm DIN 895 k	1	
705	2021 z 54	square socket wrench, 12 mm SW (opening)	1	
706	2021 z 57	square socket wrench	1	
707	2020 z 15	socket wrench, 21 mm SW (opening)	1	
708	2009 z 102	double screwdriver (exchangeable)	1	
709	2001 z 01	tyre lever	2	
710	6040 k 269	box with rubber repairing material	1	obtainable on the market
711	2208 k 12	cleaning cloth	1	
712	6040 z 255	air pump	1	
713	—	combination pliers 160 DIN 5244	1	
—	1596 z 401	sleeve for rubber repairing box	1	
—	6040 z 278	antitheft lock	1	

www.zundappveteranenclub.nl