ZÜNDAPP

SERVICE

SPARE PARTS LIST

ZÜNDAPP-MOTORCYCLE

201 S

Published in March 1957

www.zundappveteranenclub.nl

www.zundappveteranenclub.nl

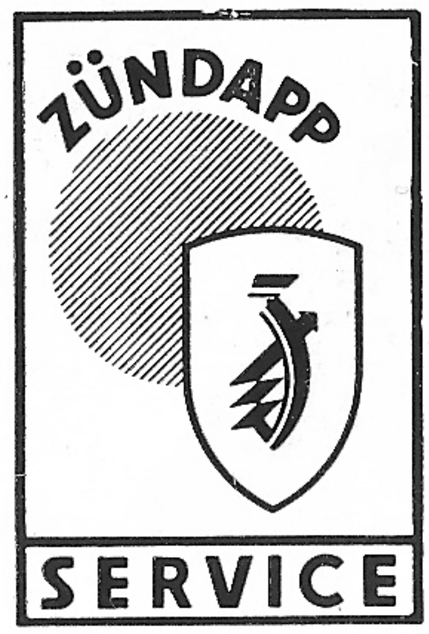

SPARE PARTS LIST

ZÜNDAPP-MOTORCYCLE

201 S

Published in March 1957

Printed in Germany

www.zundappveteranenclub.nl

	OUTER	FREE	SIZE	NIPPLES
SILVER AIR	24 3/4"	3 1/2"	.062"	2 CARB TYPE
CLUTCH	35"	4 1/4	.045	

www.zundappveteranenclub.nl

Contents

		Page	Illustration
Introduction		5	—
Group M:	a) Engine (assembly)	9	1
	b) Housing and cylinder		
	Crankcase	11	2
	Crankcase cover	15	3
	Cylinder and cylinder head	17	4
	c) Drive mechanism		
	Crankshaft, connecting rod, piston	19	5
	f) Carburettor	21	6
	Air cleaner and covering	23	7
	g) Clutch, clutch operating mechanism	25	8
Group G:	c) Shafts and gears		
	Selector shaft	27	9
	Starter shaft	31	10
	d) Footshift mechanism	33	11
Group R:	a) Frame	35	12
	Spring leg and swinging arm suspension	37	13
	b) Dual seat and toolbox	39	14
	d) Mudguards		
	Front and rear mudguard	41	15
	Chaincase	43	16
	f) Fuel tank and pipes	45	17
	h) Exhaust set	47	18
	i) Front wheel swinging arm suspension	49	19
	k) Handlebar and handlevers with cables	53	20
Group B:	a) Brakes		
	Handbrake	57	21
	Footbrake	59	22
	b) Wheels		
	Front wheel	61	23
	Rear wheel	63	24
Group E:	a) Electrical equipment		
	Headlight, battery, taillight, horn, conducts	65	25
	Battery-lighting-ignition set	71	26
Group W:	Tools	73	27

www.zundappveteranenclub.nl

www.zundappveteranenclub.nl

INTRODUCTION

Please take note that only **Genuine Zündapp Spares** will be the safeguard for security, claims under guarantee, and will prevent many a damage and loss.

Therefore, do not use parts of another origin but demand only **Genuine Zündapp Spares** from your Zündapp dealer, for by fitting imitated parts any claim under guarantee will automatically become void.

In order to avoid errors, queries, and incorrect deliveries, please quote with all orders for spare parts:

1. **Description and number of the spare part wanted**
   in accordance with this list,

2. **Frame number**
   stamped into the rating plate,

3. **Modifications made on the vehicle**
   by exchanging spare parts or groups.

If these data cannot be given it will be necessary to send in a pattern labelled with the sender's name and address. These patterns will be returned to the sender only upon request.

Model Order

Re: Frame No. 896 307

1 crankshaft with connecting rod	No. 1950 k 203
1 cylinder	No. 2162 z 209
1 piston	No. 883 z 159
3 piston rings	No. 1262 z 102.

Deliveries of spare parts are only made through our respective representatives.

All illustrations and data in this list are not binding. We reserve the right for alterations without previous notice.

ZÜNDAPP-WERKE G.M.B.H. NÜRNBERG-MÜNCHEN
NÜRNBERG WORKS

www.zundappveteranenclub.nl

201 S, right-hand view

from Frame No. 896 001

www.zundappveteranen.nl

201 S, left-hand view

from Frame No. 896 001

www.zundappveteranen.nl

Illustration 1, Group M: a) Engine (Assembly)

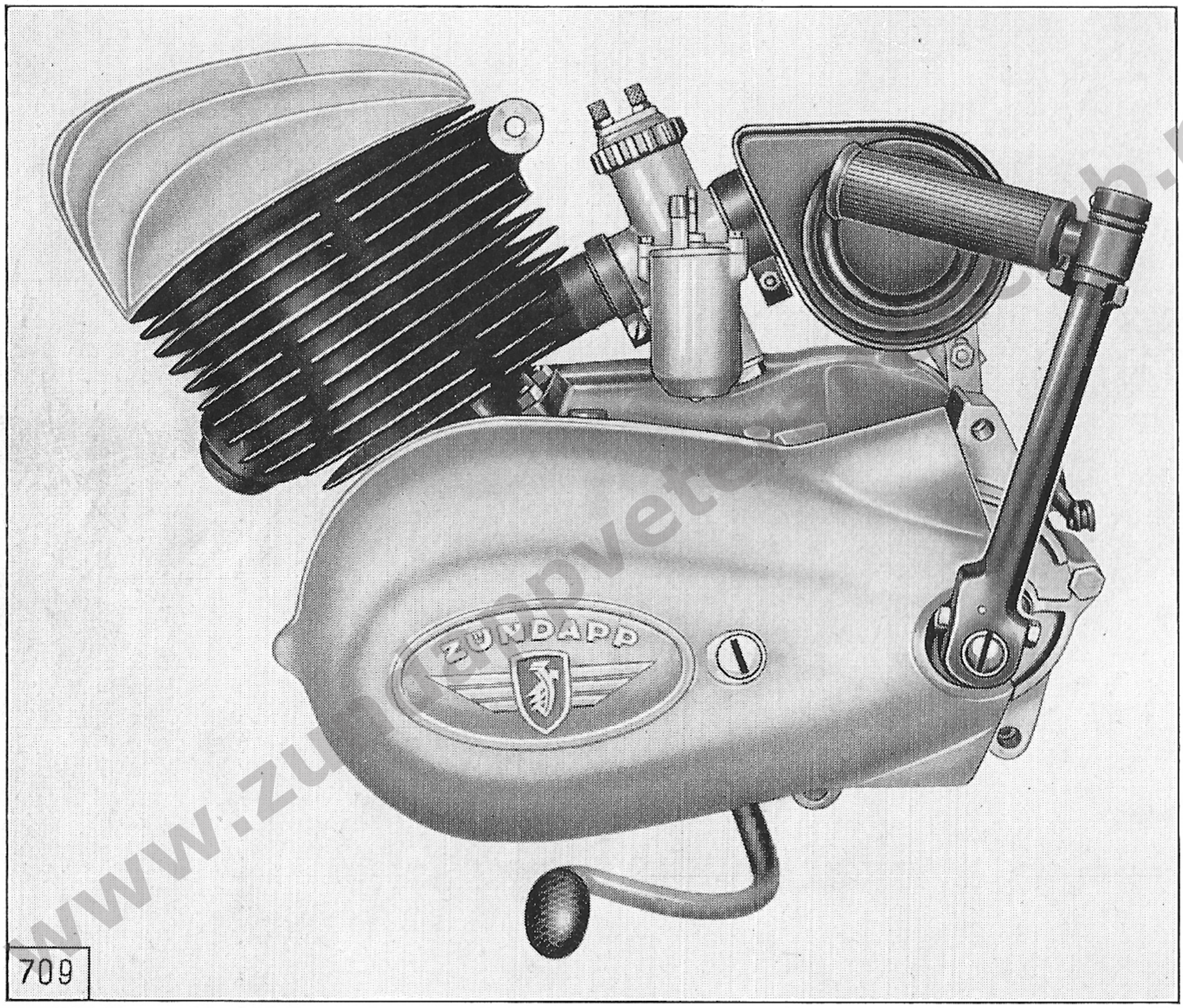

www.zundapp-vet.club.nl

Illustration 1, Group M: a) Engine (Assembly)

Key No.	Spare Part No.	Description	No. of Pieces	Remarks
		Engine		
—	6590 k 262-0	Engine complete with generator, carburettor, and starter	1	

www.zundappveteranenclub.nl

Illustration 2, Group M: b) Housing and Cylinder, Crankcase

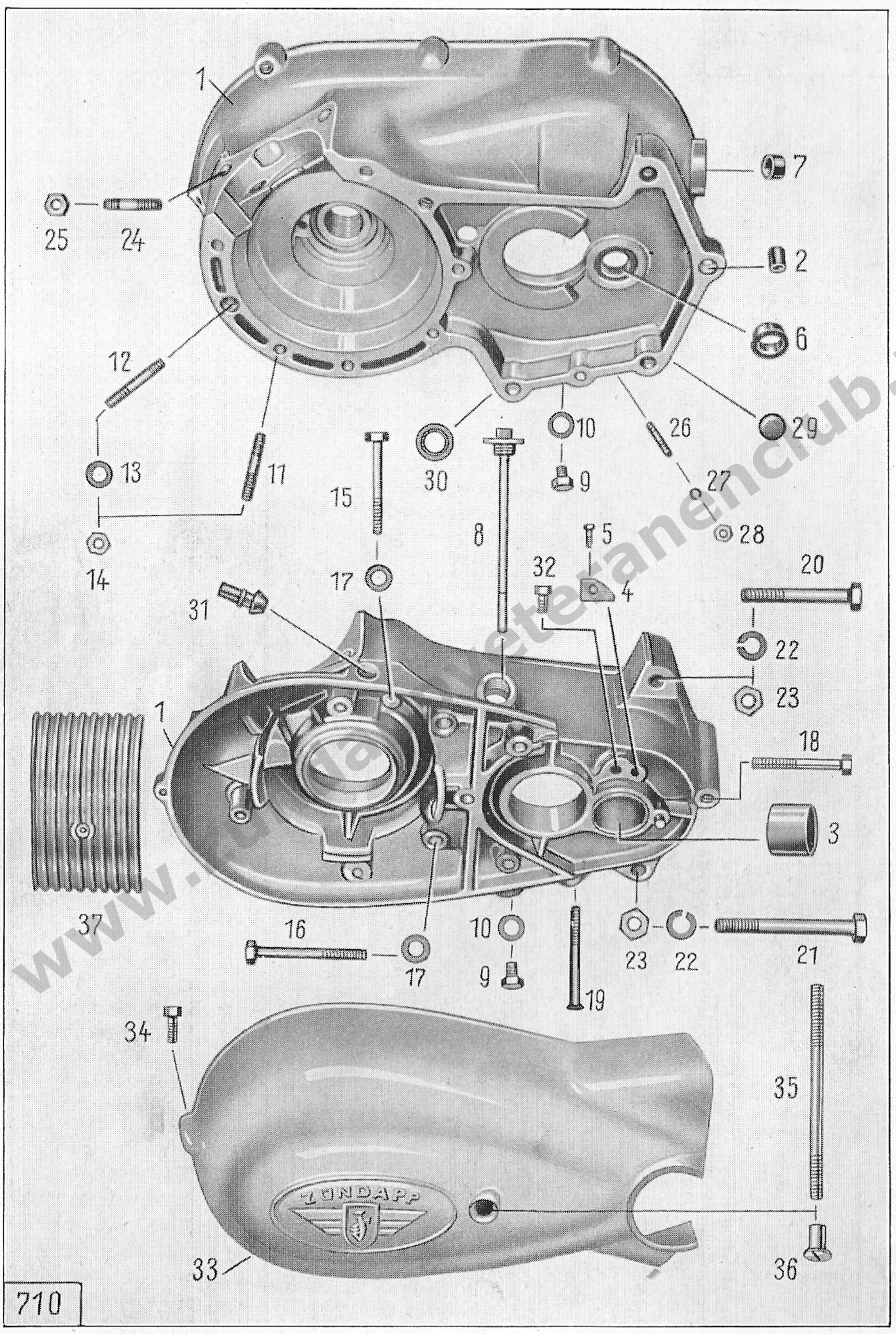

www.zündappveteranenclub.nl

Illustration 2, Group M: b) Housing and Cylinder, Crankcase

Key No.	Spare Part No.	Description	No. of Pieces	Remarks
		Crankcase		
1	510 k 231-0	crankcase complete	1	
2	181 z 18	dowel bushing (between left and right half of crankcase)	2	
3	184 z 501	bearing bushing (for starter shaft, left-hand)	1	
4	1141 z 2151	stop (to engaging pin)	1	
5	1041 z 101	rivet	1	
6	184 z 318	bearing bushing (for starter shaft, right-hand)	1	
7	184 z 328	bearing bushing (for clutch pressure bar)	1	
8	1550 z 112	oil dip stick (for gearbox)	1	
9	—	hex screw M 8 × 10 DIN 933 k (for oil draining)	2	
10	—	packing washer C 8 × 14 DIN 7603	2	
11	—	stud M 8 × 30 DIN 835 k (to fasten left to right half of crankcase) ..	2	
—	—	hex screw M 8 × 32 DIN 931 k (to fasten left to right half of crankcase)	1	
12	—	stud M 8 × 35 DIN 939 k (to fasten left to right half of crankcase) ..	1	
13	—	spring washer B 8 DIN 137 k	4	
14	—	hex nut M 8 DIN 934 k	4	
15	—	hex screw M 8 × 60 DIN 931 k (to fasten left to right half of crankcase)	1	
16	—	hex screw M 8 × 75 DIN 931 k (to fasten left to right half of crankcase)	2	
17	1303 z 02	shim	3	
18	—	cylindrical screw CM 8 × 75 DIN 84 k (to fasten left to right half of crankcase)	1	
19	—	screw, countersunk raised head M 8 × 65 DIN 91a (to fasten left to right half of crankcase)	1	
20	—	hex screw M 10 × 70 DIN 931 k (to fasten engine to frame)	1	

www.zundappveteranenclub.nl

www.zundappveteranenclub.nl

Illustration 2, Group M: b) Housing and Cylinder, Crankcase

Key No.	Spare Part No.	Description	No. of Pieces	Remarks
21	—	hex screw M 10 × 90 DIN 931 k (to fasten engine to frame)	2	
22	—	spring washer A 10 DIN 127 k	4	
23	—	hex nut M 10 DIN 934 k	3	
24	1561 z 010	stud (to fasten cylinder)	4	
25	—	hex nut M 8 DIN 934 k	4	
26	1561 z 107	stud (to fasten gear selector support)	4	
27	—	spring washer A 5 DIN 127 k	4	
28	—	hex nut M 5 DIN 934	4	
29	—	lock washer 16 DIN 470 (to right half of crankcase)	1	
30	—	radial gasket (oil seal) B 14 × 24 × 7 DIN 6503 (to footshift shaft)	1	
—	—	stud M 6 × 30 DIN 835 k (to fasten bracket for silencer)	2	
—	—	shake-proof (toothed) washer J 6,4 DIN 6797 k	2	
—	—	hex nut M 6 DIN 934 k	2	
31	1806 z 105	rubber grommet (to generator cable) in left half of crankcase	1	
32	—	hex screw M 8 × 1 × 20 DIN 960 k (stop screw for starter)	1	
—	—	spring washer B 8 DIN 137 k	1	
—	—	hex nut M 8 × 1 DIN 936 k	1	
33	263 z 209	cover (to generator)	1	
34	—	hex screw M 6 × 22 DIN 931 k (to fasten cover to crankcase) ..	1	
35	—	stud M 8 × 140 DIN 835 k (to fasten cover to crankcase) ..	1	
36	1541 z 310	screw, countersunk raised head (with internal thread)	1	
37	653 z 127	facing for crankcase	1	
—	—	screw, fillister head, AM 6 × 20 DIN 85 k	1	
—	—	spring washer A 6 DIN 137 k	1	

www.zundappveteranenclub.nl

Illustration 3, Group M: b) Housing and Cylinder, Crankcase Cover

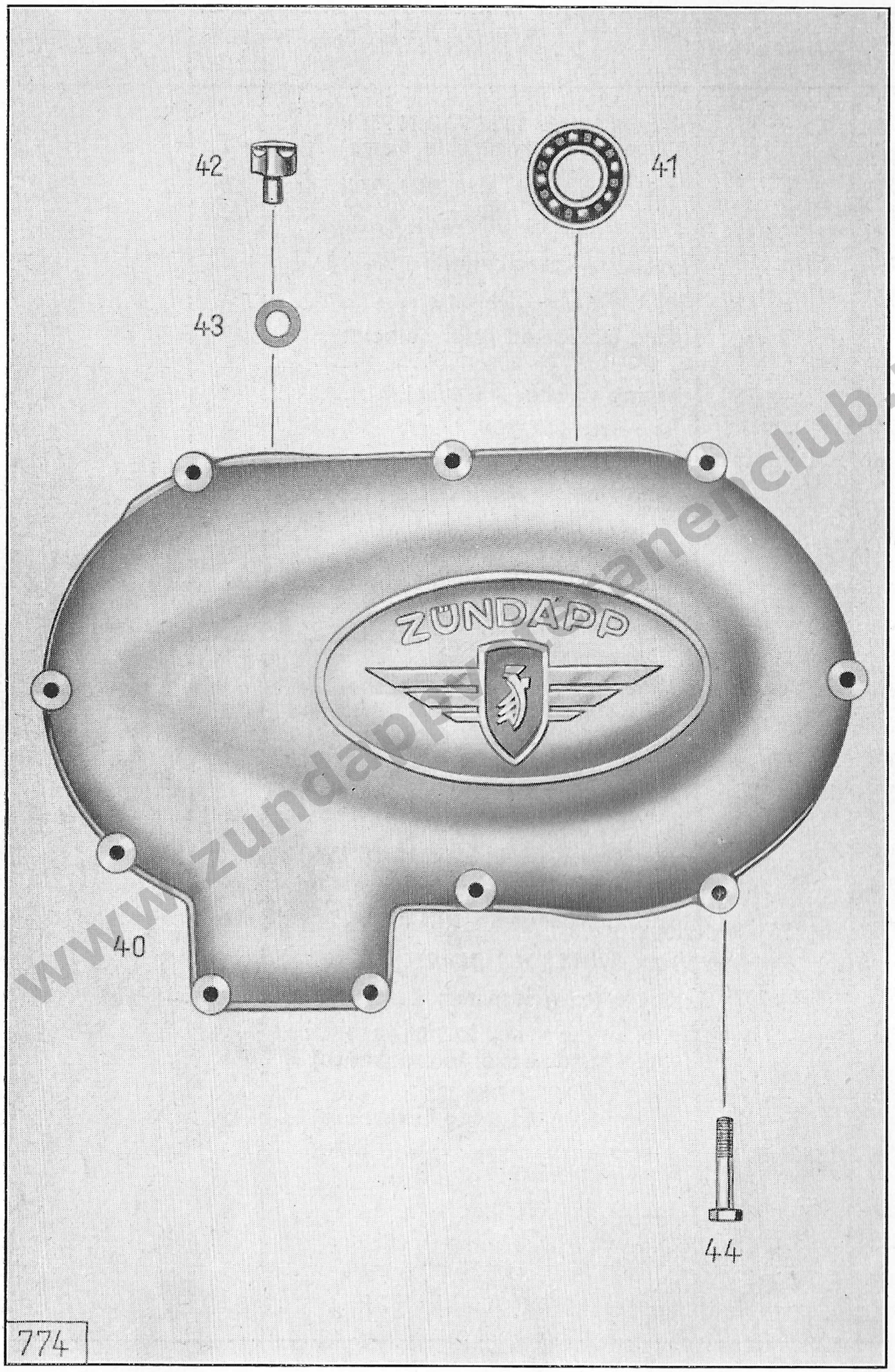

www.zundappclub.nl

Illustration 3, Group M: b) Housing and Cylinder, Crankcase Cover

Key No.	Spare Part No.	Description	No. of Pieces	Remarks
		Crankcase Cover		
40	263 z 39	crankcase cover	1	
41	—	ball bearing 6203 DIN 625	1	
42	1121 z 32	supporting bolt	1	
43	1301 z 52	compensating shim } for supporting	as required	
—	1301 z 616	compensating shim } bolt		
44	—	hex screw M 6 × 35 DIN 931 k (to fasten crankcase cover to crankcase)	8	

www.zundappveteranenclub.nl

Illustration 4, Group M: b) Housing and Cylinder, Cylinder and Cylinder Head

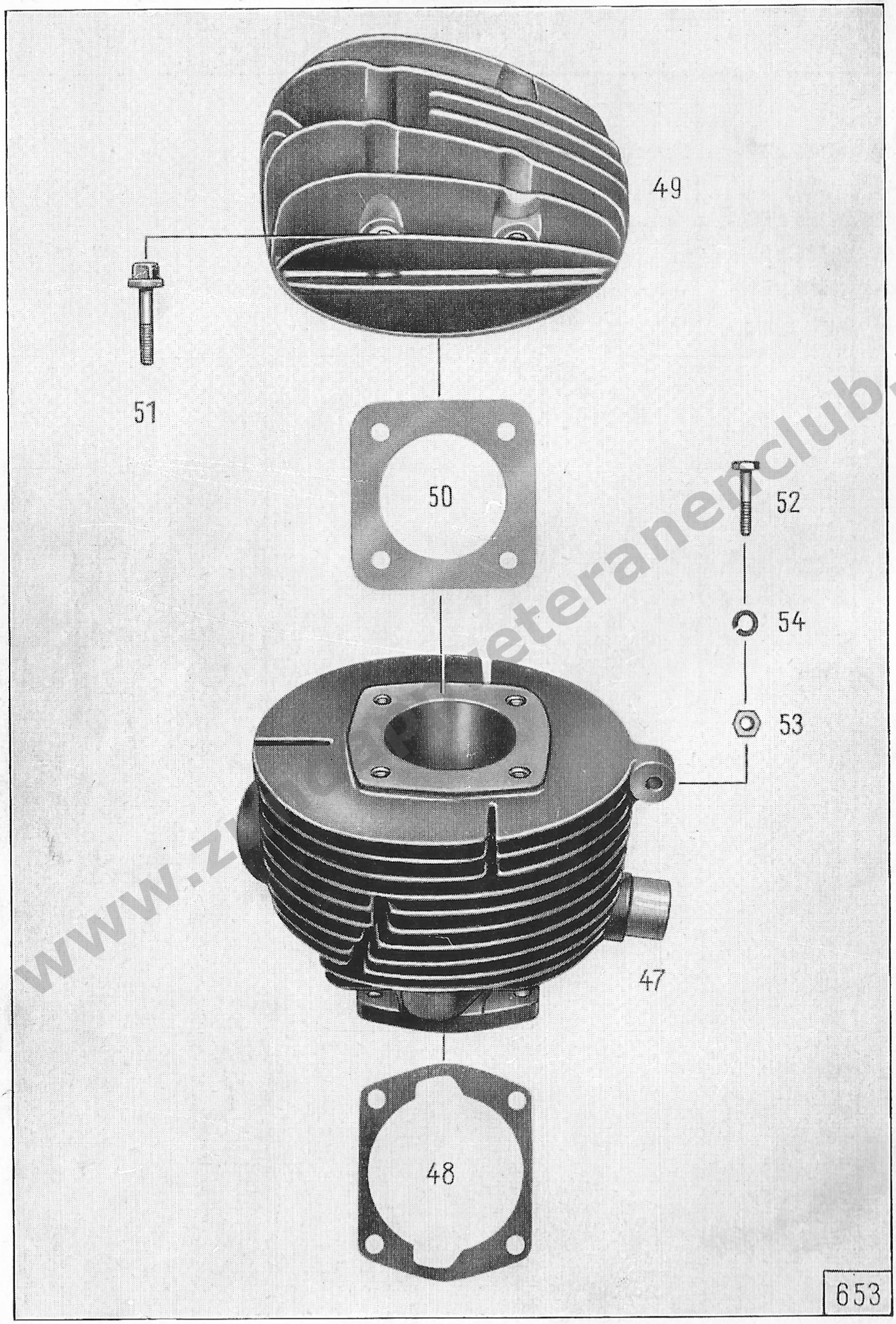

www.zeteranenclub.nl

Illustration 4, Group M: b) Housing and Cylinder, Cylinder and Cylinder Head

Key No.	Spare Part No.	Description	No. of Pieces	Remarks
		Cylinder		
47	2162 z 209-8	cylinder	1	
48	468 z 315-0	cylinder base gasket	1	
49	273 z 159-0	cylinder head	1	
50	461 z 6	cylinder head gasket	1	
51	1551 z 016	square screw (to fasten cylinder head)	4	
52	—	hex screw M 8 × 35 DIN 931 k (to fasten engine to frame)	1	
53	—	hex nut M 8 DIN 934 k	1	
54	—	spring washer A 8 DIN 127 k	1	

www.zundappveteranenclub.nl

Illustration 5, Group M: c) Drive Mechanism, Crankshaft, Connecting Rod, and Piston

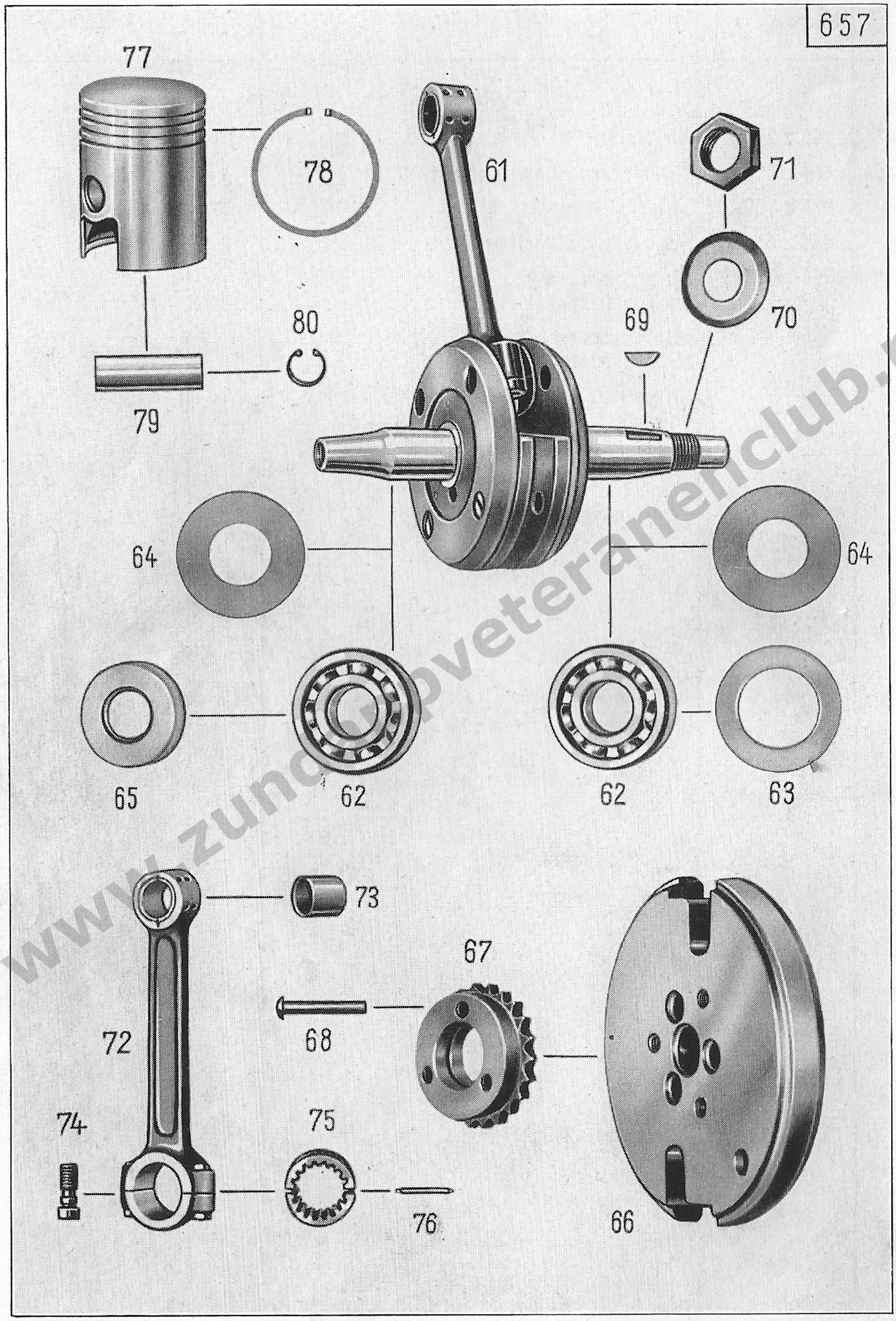

www.zundapveteranenclub.nl

Illustration 5, Group M: c) Drive Mechanism, Crankshaft, Connecting Rod, and Piston

Key No.	Spare Part No.	Description	No. of Pieces	Remarks
		Crankshaft		
61	1950 k 203	crankshaft with connecting rod ..	1	
62	—	ball bearing M 25 DIN 615	2	
63	1301 z 132	compensating shim 41 × 61,5 × 0,1	as required	between ball bearing and crankcase
—	1301 z 133	compensating shim 41 × 61,5 × 0,2		
—	1301 z 134	compensating shim 41 × 61,5 × 0,3		
—	1301 z 135	compensating shim 41 × 61,5 × 0,5		
—	1301 z 1012	compensating shim		
64	1281 z 382	covering washer	2	
65	—	radial gasket (oil seal) B 25 × 52 × 12 DIN 6503	1	
66	1310 z 52	flywheel with sprocket	1	
67	2101 z 152	sprocket 22 teeth (to flywheel)	1	
68	—	rivet, button head, 7 × 40 DIN 660	3	
69	—	key 4 × 6,5 DIN 6888	1	
70	1291 z 64	safety washer	1	
71	1001 z 020	hex nut	1	
		Connecting Rod		
72	1160 k 151	connecting rod	1	
73	184 z 523	gudgeon pin bushing	1	
74	1571 z 01	connecting rod screw	2	
75	1874 z 01	cage ring	1	
76	1871 z 01	bearing needle	18	
		Piston		
77	883 z 159-0	piston 64,0 mm ⌀ (standard)	1	
—	2473 k 65-0	piston 64,5 mm ⌀ (1st oversize) ..	1	
—	2473 k 66-0	piston 65,0 mm ⌀ (2nd oversize) ..	1	
—	2473 k 67-0	piston 65,5 mm ⌀ (3rd oversize) ..	1	
—	2473 k 68-0	piston 66,0 mm ⌀ (4th oversize) ..	1	
78	1262 z 102	piston ring 64,0 mm ⌀ (standard) ..	3	
—	2442 k 45-0	piston ring 64,5 mm ⌀ (1st oversize)	3	
—	2442 k 46-0	piston ring 65,0 mm ⌀ (2nd oversize)	3	
—	2442 k 47-0	piston ring 65,5 mm ⌀ (3rd oversize)	3	
—	2442 k 48-0	piston ring 66,0 mm ⌀ (4th oversize)	3	
79	121 z 1066	gudgeon pin	1	
80	—	circlip 18 × 1 DIN 472	2	

www.zundappveteranenclub.nl

Illustration 6, Group M: f) Carburettor

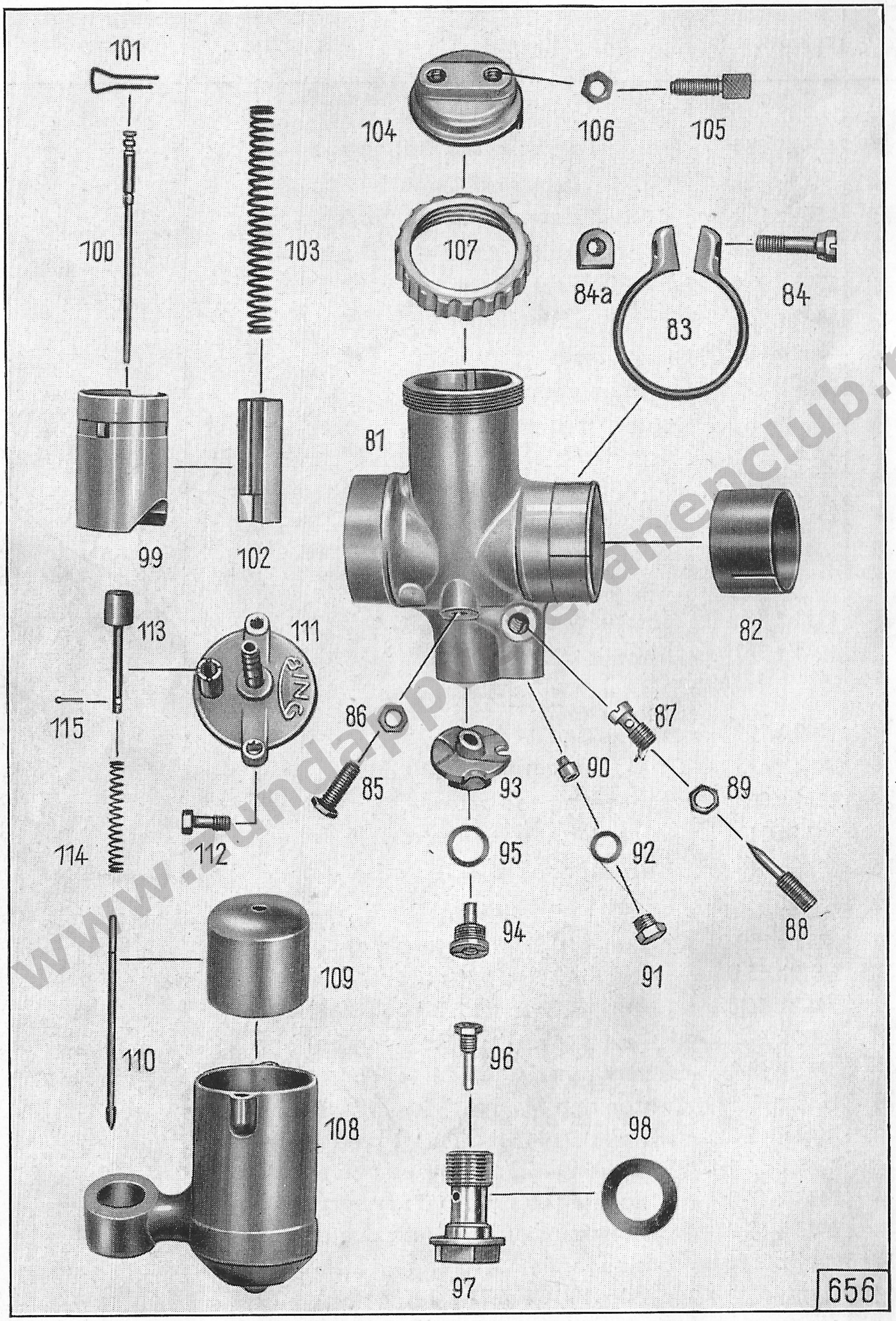

www.zundapp-janenclub.nl

Key No.	Spare Part No.	Description	No. of Pieces	Remarks
		Carburettor		
—	6430 z 80-0	carburettor (model Bing 2/24/46)	1	
81	2403 k 89-0	carburettor housing	1	
82	2407 k 16-0	insulating bushing (to carburettor housing)	1	
83	2401 k 97-2	clamping ring	1	
84	2401 k 98-2	screw (to clamping ring)	1	
84a	2401 k 99-2	nut (to above screw)	1	
85	2401 k 3-2	idle running adjusting screw	1	
86	2401 k 6-2	nut (to idle running adjusting screw)	1	
87	2401 k 10-4	idle jet	1	
88	2401 k 14-2	idle air screw	1	
89	2401 k 12-4	nut (to idle air screw)	1	
90	2404 k 23-0	idle jet (size 45)	1	
91	2401 k 51-6	lock screw (to idle jet)	1	
92	2407 k 6-0	gasket (to lock screw)	1	
93	2403 k 90-0	mixing chamber insert (size 5)	1	
94	2404 k 1-0	needle jet (size 2,70)	1	
95	2407 k 12-0	gasket (to needle jet)	1	
96	2404 k 2-0	main jet (size 110)	1	
97	2403 k 6-0	jet block	1	
98	2407 k 1-0	gasket (to jet block)	2	
99	2403 k 91-0	gas slide	1	
100	2401 k 88-0	jet needle	1	
101	2401 k 8-2	clip (to jet needle)	1	
102	2403 k 92-0	air slide	1	
103	2401 k 52-2	slide spring	2	
104	2403 k 71-0	cover plate	1	
105	2401 k 5-4	cable adjusting screw	2	
106	2401 k 6-2	nut (to cable adjusting screw)	2	
107	2403 k 51-0	nut (to seal cover)	1	
108	2403 k 93-0	float chamber	1	
109	2404 k 31-0	float	1	
110	2401 k 73-2	float needle	1	
111	2403 k 94-0	float chamber cover	1	
112	2401 k 61-2	fixing screw (to cover)	2	
113	2401 k 71-2	tickler	1	
114	2401 k 57-2	tickler spring	1	
115	2401 k 19-3	split pin	1	

www.zandappveteranenclub.nl

Illustration 7, Group M: f) Air Cleaner and Covering

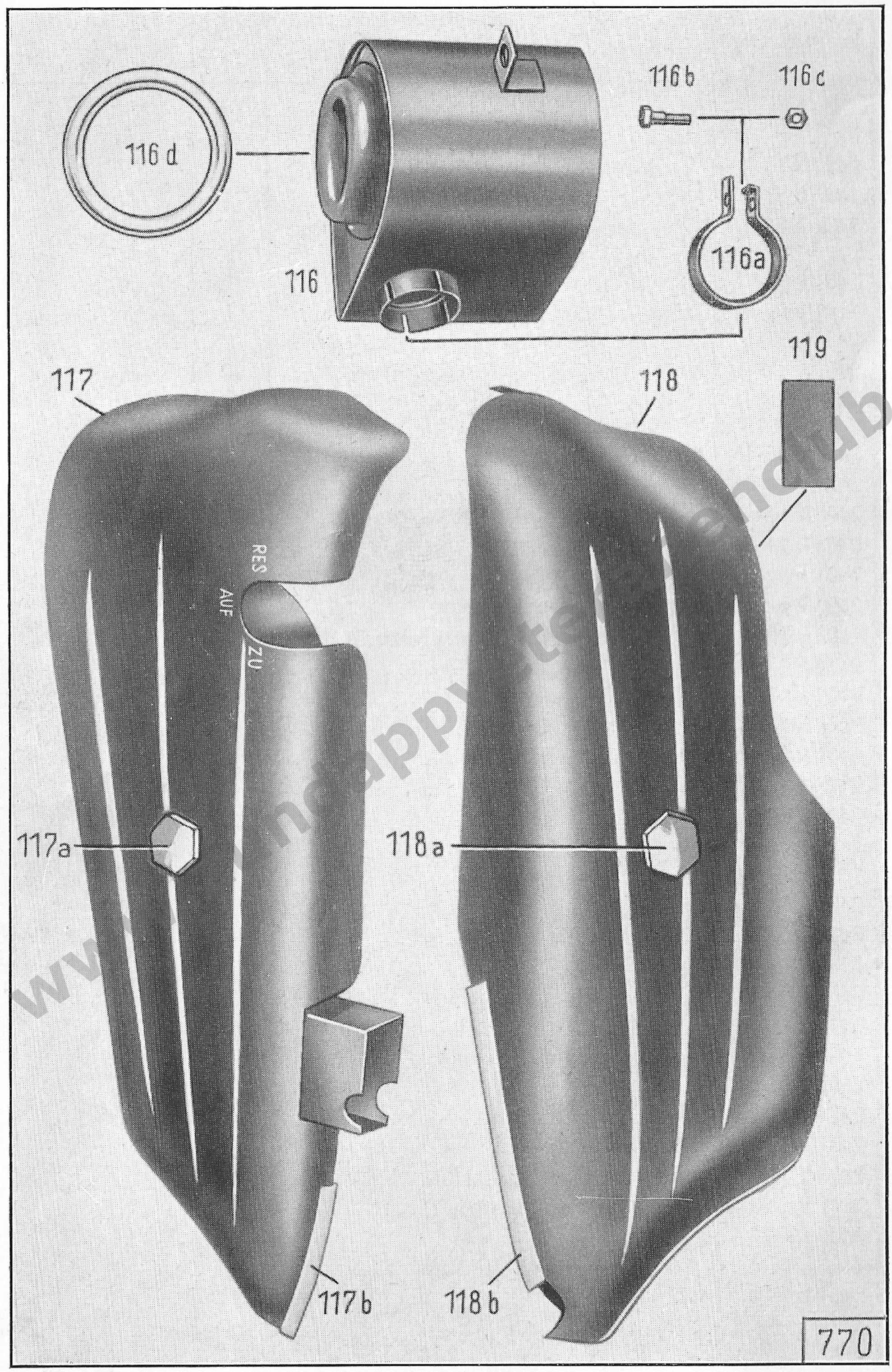

www.nappyteamclub.nl

Illustration 7, Group M: f) Air Cleaner and Covering

Key No.	Spare Part No.	Description	No. of Pieces	Remarks
		Air Cleaner		
116	6410 z 209-8	air cleaner	1	
116a	1441 z 160	clamp	1	
116b	—	hex screw M 6 × 22 DIN 931 k (to clamp) ..	1	
116c	—	hex nut M 6 DIN 934 k	1	
—	—	hex screw M 6 × 10 DIN 933 k (to fasten air cleaner to frame)	1	
—	—	spring washer A 6 DIN 137 k	1	
116d	1236 z 341-0	rubber ring	1	
		Covering		
117	6350 z 122-0	half of covering, left-hand	1	
117a	1551 z 441-4	hex screw	1	
—	—	spring washer A 10 DIN 137 k	1	
—	1331 z 850-3	distance tube	1	
117b	1396 z 247-0	profile rubber	1	
118	650 z 299-8	half of covering, right-hand	1	
118a	1541 z 441-4	hex screw	1	
—	1331 z 850-3	distance tube	1	
—	—	spring washer A 10 DIN 137 k	1	
118b	1396 z 236-0	profile rubber	2	
119	1146 z 99-0	rubber plate	1	

www.zundappveteranenclub.nl

Illustration 8, Group M: g) Clutch, Clutch, Clutch Operating Mechanism

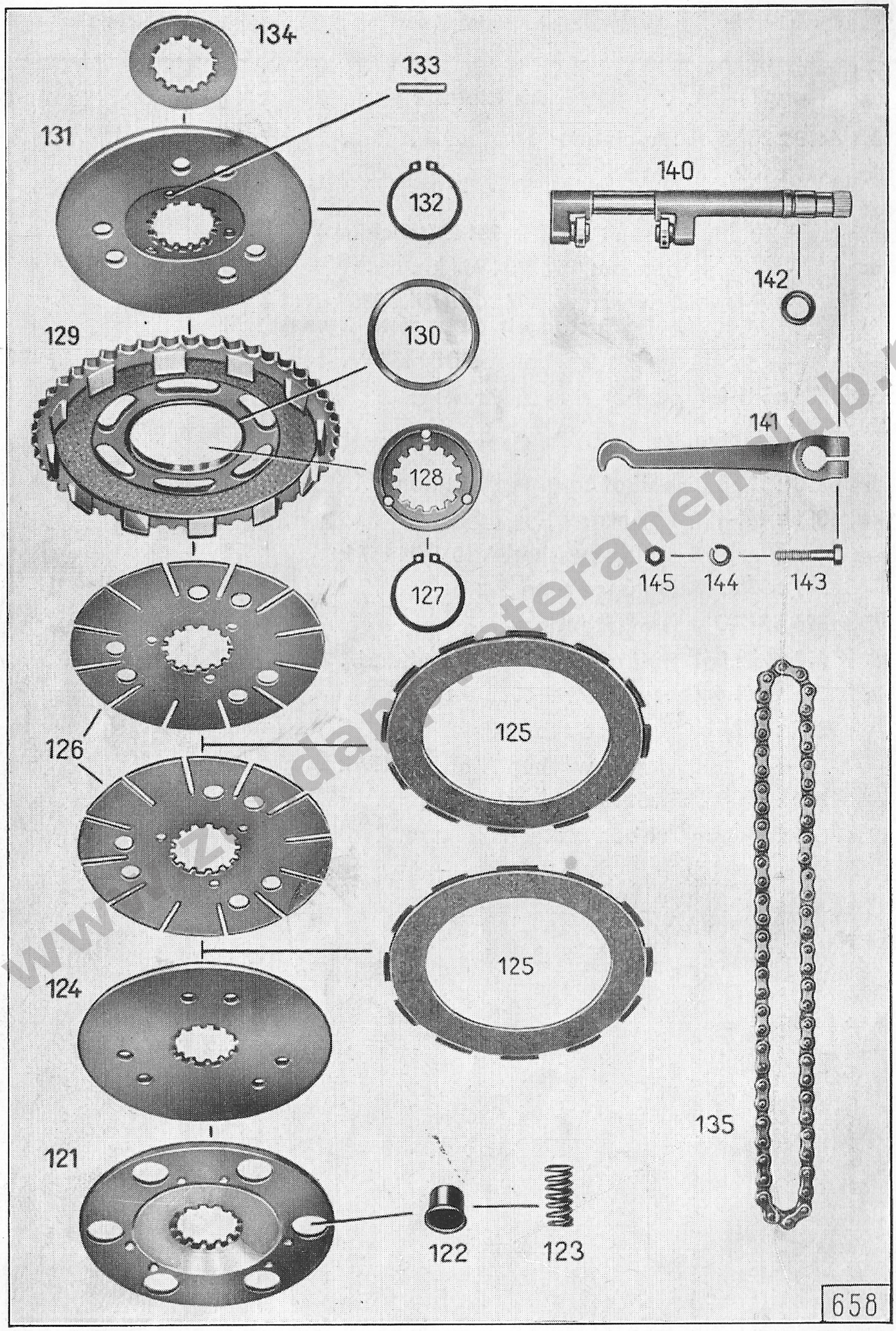

www.zadampeteranen-club.nl

Illustration 8, Group M: g) Clutch, Clutch, Clutch Operating Mechanism

Key No.	Spare Part No.	Description	No. of Pieces	Remarks
		Clutch		
121	921 z 69	spring plate	1	
122	781 z 273	spring cup (in spring plate)	6	
123	321 z 45	clutch spring	6	
124	921 z 67	clutch pressure plate	1	
125	920 z 52	clutch disk (with lining)	2	
126	921 z 68	clutch disk	2	
127	—	circlip 35 × 1,5 DIN 471	1	with ground side surfaces
128	1231 z 212	spacer ring	1	
129	2100 z 165	clutch sprocket with bushing, 48 teeth	1	
130	184 z 317	bushing (in clutch sprocket)	1	
131	921 z 203	clutch plate	1	
132	—	circlip 35 × 1,5 DIN 471	1	with ground side surfaces
133	1691 z 113	push rod	3	
134	1231 z 213	pressure ring	1	
135	—	roller chain, 62 links, endless A 9,5 × 9,5 DIN 73 232	1	
		Clutch Operating Mechanism		
140	1940 z 25	clutch pressure bar, complete	1	
141	671 z 318	clutch lever (for clutch pressure bar)	1	
142	1236 z 222	packing washer	1	
143	—	hex screw M 6 × 28 DIN 931 k (to fasten clutch lever to clutch pressure bar)	1	
144	—	spring washer A 6 DIN 127 k	1	
145	—	hex nut M 6 DIN 934 k	1	

www.zundappveteranenclub.nl

Illustration 9, Group G: c) Shafts and Gears, Selector Shaft

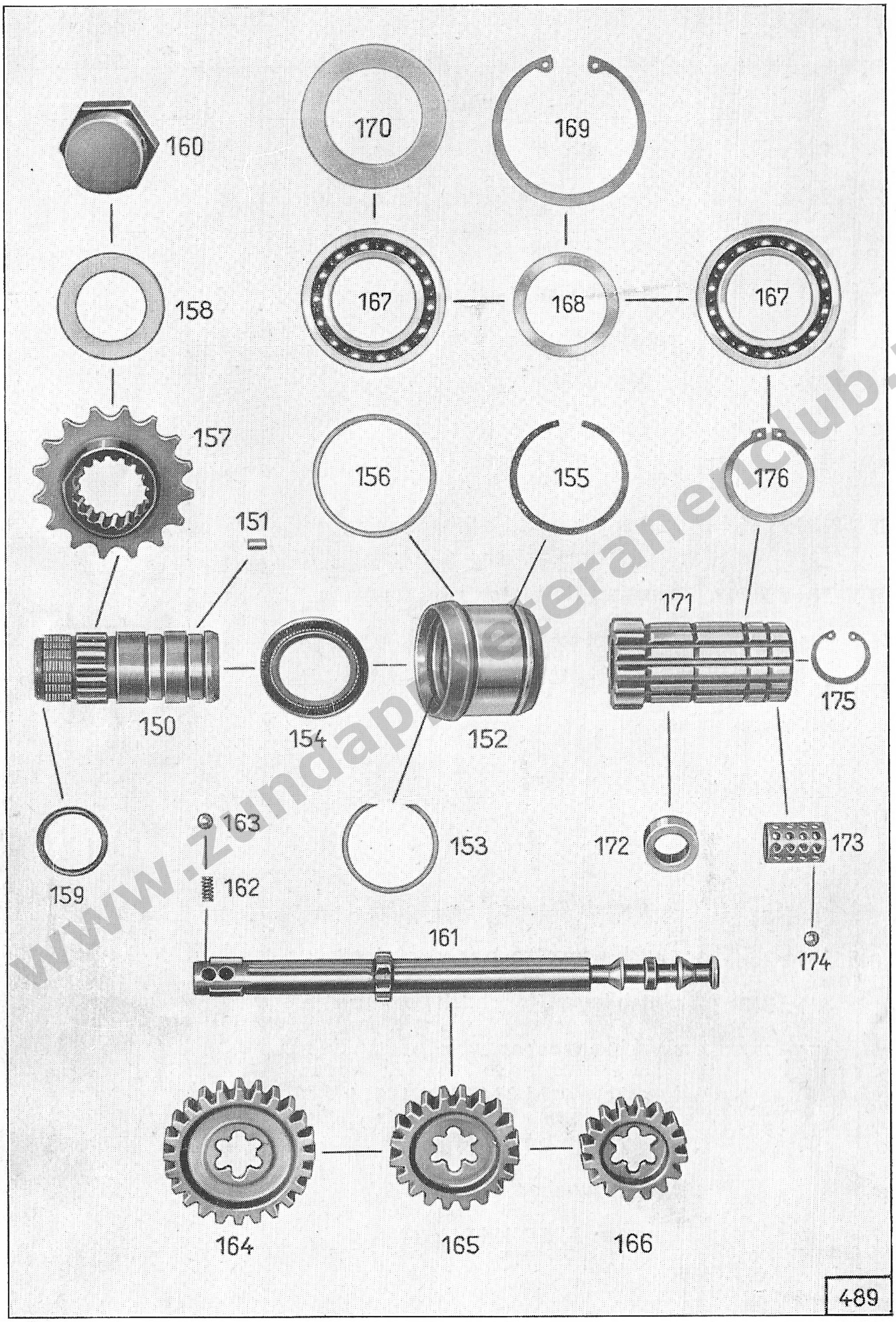

www.zundapsteeraneclub.nl

Key No.	Spare Part No.	Description	No. of Pieces	Remarks
		Selector Shaft		
150	961 z 125	final drive shaft	1	
151	1871 z 07	roller	38	
152	1871 z 154	bearing ring (to left half of crankcase)	1	
153	1251 z 99	internal circlip } in order to compensate bearing play inside the bearing ring	2	at option
—	1251 z 251	internal circlip	2	
—	1251 z 252	internal circlip	2	
154	—	radial gasket (oil seal) B 32 × 45 × 7 DIN 6503 (in bearing ring)	1	B303
155	1251 z 176	snap ring (to fasten bearing ring in half of crankcase)	1	
156	1301 z 603	compensating shim 48,1 × 52,3 × 0,5	as required	between bearing ring and half of crankcase
—	1301 z 604	compensating shim 48,1 × 52,3 × 0,3		
—	1301 z 605	compensating shim 48,1 × 52,3 × 0,2		
157	2101 z 60	sprocket, 16 teeth (on final drive shaft)	1	
158	1291 z 65	safety washer	1	
159	1236 z 220	packing washer	1	
160	—	lock nut M 30 × 1,5 DIN 7605 k (to fasten sprocket on final drive shaft)	1	
161	1921 z 701	selector shaft	1	
162	321 z 312	pressure spring	2	
163	—	ball 6 mm III DIN 5401	3	
164	2131 z 303	gear wheel 1st speed 24 teeth	1	
165	2131 z 304	gear wheel 2nd speed 20 teeth	1	
166	2131 z 307	gear wheel 3rd speed 17 teeth	1	
167	—	ball bearing 16 007 DIN 625 (to right half of crankcase)	2	
168	—	spacer ring 35 × 45 × 2 DIN 988 (between the ball bearings)	1	

www.zundappveteranenclub.nl

www.zundappveteranenclub.nl

Illustration 9, Group G: c) Shafts and Gears, Selector Shaft

Key No.	Spare Part No.	Description	No. of Pieces	Remarks
169	—	circlip 62 × 2 DIN 472	1	
170	1301 z 133	compensating shim (betw. crankcase and ball bearing)	1	
171	960 z 101	clutch hub (simultaneously 4th speed)	1	
172	184 z 324	bearing bushing (in clutch hub) ..	1	
173	1871 z 151	ball cage	1	
174	—	ball 4 mm III DIN 5401	40	
175	1251 k 259-0	circlip J 23 × 1,2	1	
176	—	circlip 35 × 1,5 DIN 471 (to fasten clutch hub to half of crankcase)	1	with ground side surfaces

www.zundappveteranenclub.nl

Illustration 10, Group G: c) Shafts and Gears, Starter Shaft

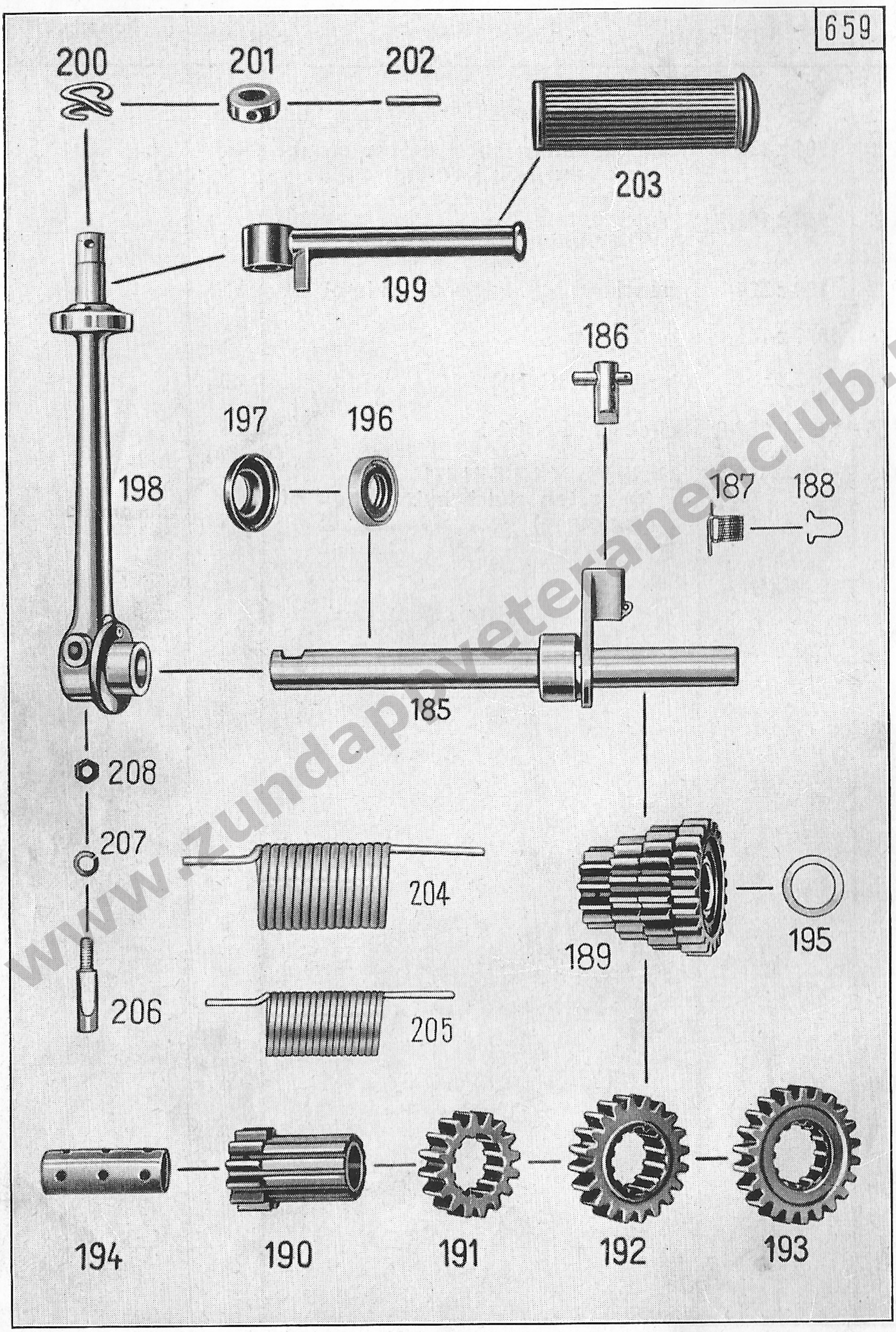

www.zundapveteranenclub.nl

Key No.	Spare Part No.	Description	No. of Pieces	Remarks
		Starter Shaft		
185	1940 z 205-0	starter shaft, complete	1	
186	1690 z 3	engaging pin with return pin	1	
187	321 z 314	lock spring	1	
188	211 z 201	spring clip	1	
189	2130 z 101	counter-gear wheel block, compl.	1	
190	2131 z 238	gear wheel 1st speed 12 teeth	1	
191	2131 z 239	gear wheel 2nd speed 16 teeth	1	
192	2131 z 247	gear wheel 3rd speed 19 teeth	1	
193	2131 z 237	drive gear wheel 22 teeth	1	
194	184 z 316	bushing	1	
195	1301 z 177	compensating shim 18,2 × 25,7 × 0,5	as required	between gear wheel block and right half of crankcase
—	1301 z 367	compensating shim 18,2 × 25,7 × 0,2		
—	1301 z 368	compensating shim 18,2 × 25,7 × 0,3		
196	—	gasket "Diring" (model K 200) 17 × 30 × 7 DIN 6503	1	
197	781 z 274	protective cap (for gasket "Diring")	1	
198	901 z 206-4	starter arm	1	
199	131 z 02	kick start foot piece	1	
200	1251 z 253	double spring washer	1	
201	1231 z 215	fixing ring	1	
202	—	pin 4 × 22 DIN 1471	1	
203	616 z 01	rubber sleeve	1	
204	321 z 573-3	return spring (to starter shaft)	1	
205	321 z 574-3	return spring (to starter shaft)	1	
206	121 z 553	cotter pin (to fasten starter arm to starter shaft)	1	
207	—	spring washer A 6 DIN 127 k	1	
208	—	hex nut M 6 DIN 934 k	1	

www.zundapveteranenclub.nl

Illustration 11, Group G: d) Footshift Mechanism

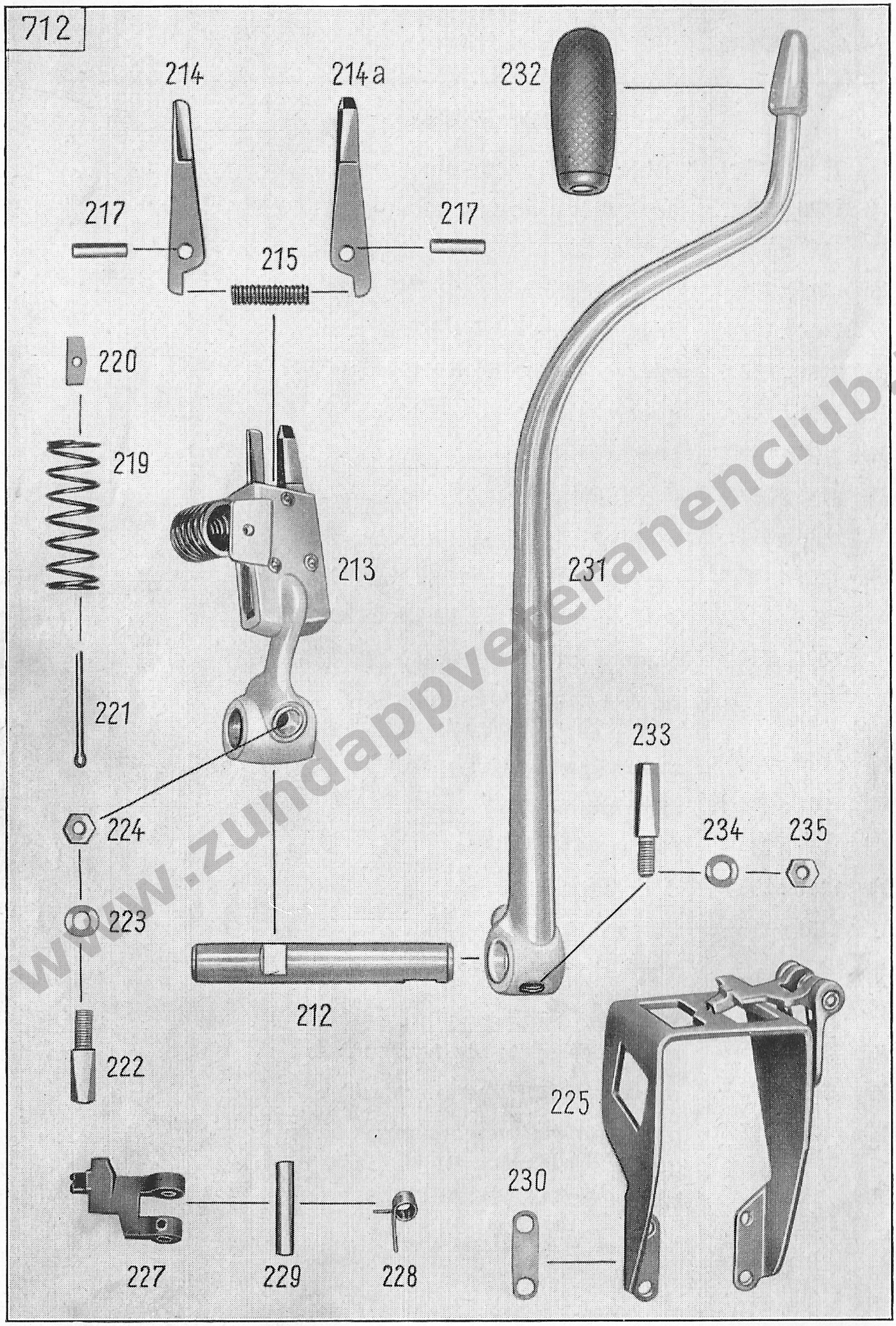

www.zundappveteranenclub.nl

Illustration 11, Group G: d) Footshift Mechanism

Key No.	Spare Part No.	Description	No. of Pieces	Remarks
		Footshift Mechanism		
212	1941 z 311-4	footshift shaft	1	
213	670 z 233-0	gear selector fork, complete	1	
214	841 z 40-0	selector finger, left-h.	1	
214a	841 z 41-0	selector finger, right-h.	1	
215	321 z 317	pressure spring	1	
217	—	riveting pin A 5 h 9 × 20 DIN 7341 ..	3	
219	321 z 316	return spring	1	
220	1281 z 359	joint	2	
221	—	split pin 3 × 35 DIN 94	1	
222	121 z 1112-3	cotter pin (to fasten gear selector fork to footshift shaft)	1	
223	—	spring washer B 6 DIN 137 k	2	
224	—	hex nut M 6 DIN 934 k	1	
225	200 z 107	gear selector support with ratchet	1	
227	841 z 39	ratchet	1	
228	321 z 322	ratchet spring	1	
229	—	riveting pin A 6 h 9 × 32 DIN 7341 ..	1	
230	1281 z 242	joint } to gear selector support	4	} at option
—	1281 z 243	joint } to gear selector support	4	} at option
—	1281 z 244	joint } to gear selector support	4	} at option
231	683 z 11-0	footshift lever	1	
232	616 z 25	rubber sleeve	1	
233	121 z 553	cotter pin (to fasten footshift lever to footshift shaft)	1	
234	—	spring washer B 6 DIN 137 k	2	
235	—	hex nut M 6 DIN 934 k	1	

www.zundappveteranenclub.nl

Illustration 12, Group R: a) Frame

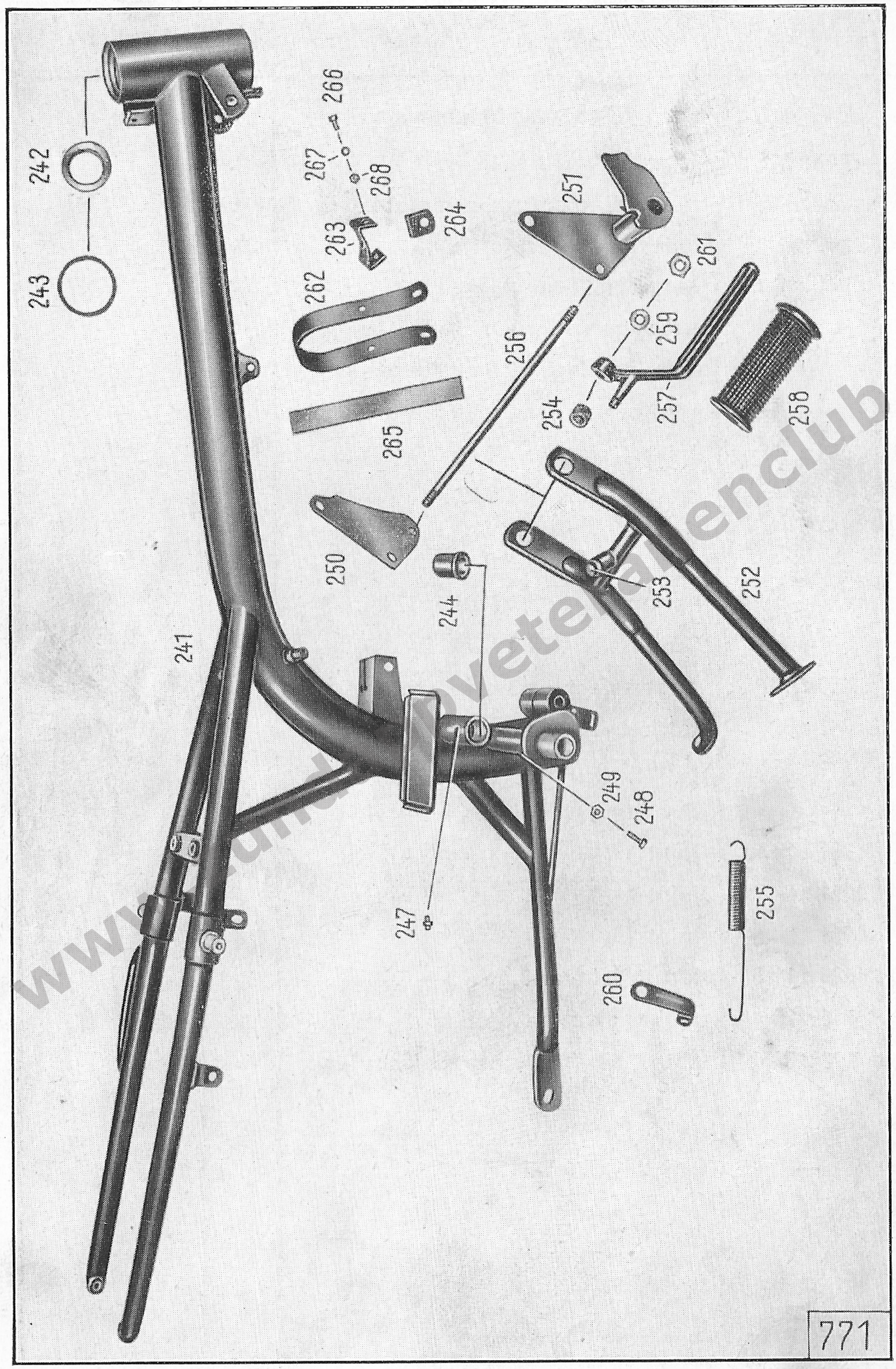

www.kanbepveteranenclub.nl

Key No.	Spare Part No.	Description	No. of Pieces	Remarks
		Frame		
241	6690 z 328-8	frame	1	
242	1871 z 171	frame race	2	
243	1231 z 210	covering washer	1	
244	184 z 525-0	bushing (for swinging arm)	2	
247	1080 z 1	grease nipple	1	
248	—	hex screw M 6 × 20 DIN 933 k (stop screw for footbrake lever)	1	
249	—	hex nut M 6 DIN 934 k	1	
250	1140 z 1238-8	bracket, left-h. (to lower engine suspension) ..	1	
251	1140 z 1257-8	bracket, right-h.	1	
252	1750 z 233-8	center stand	1	
253	616 z 219	rubber damper (in center stand) ..	1	
254	1331 z 923-0	distance tube	2	
255	321 z 545-2	return spring (to center stand) ..	1	
256	121 z 1142-2	footrest rod	1	
257	631 z 598-8	footrest arm	2	
258	616 z 237	footrest rubber	2	
259	—	spring washer B 12 DIN 137	2	
260	1181 z 413-2	bracket (to return spring)	1	
261	—	hex nut M 12 × 1,5 DIN 936 k	2	
262	1141 z 2216-2	holding clip	1	
263	1141 z 2214-2	bracket	1	
264	1141 z 2215	reinforcing plate (to cylinder)	2	
265	1396 z 251-0	rubber band	1	
266	—	hex screw M 6 × 12 DIN 933 k (for fixing holding clip)	2	
267	—	spring washer B 6 DIN 137 k	2	
268	—	hex nut M 6 DIN 934 k	2	

www.zundappveteranenclub.nl

Illustration 13, Group R: a) Frame, Spring Leg and Swinging Arm Suspension

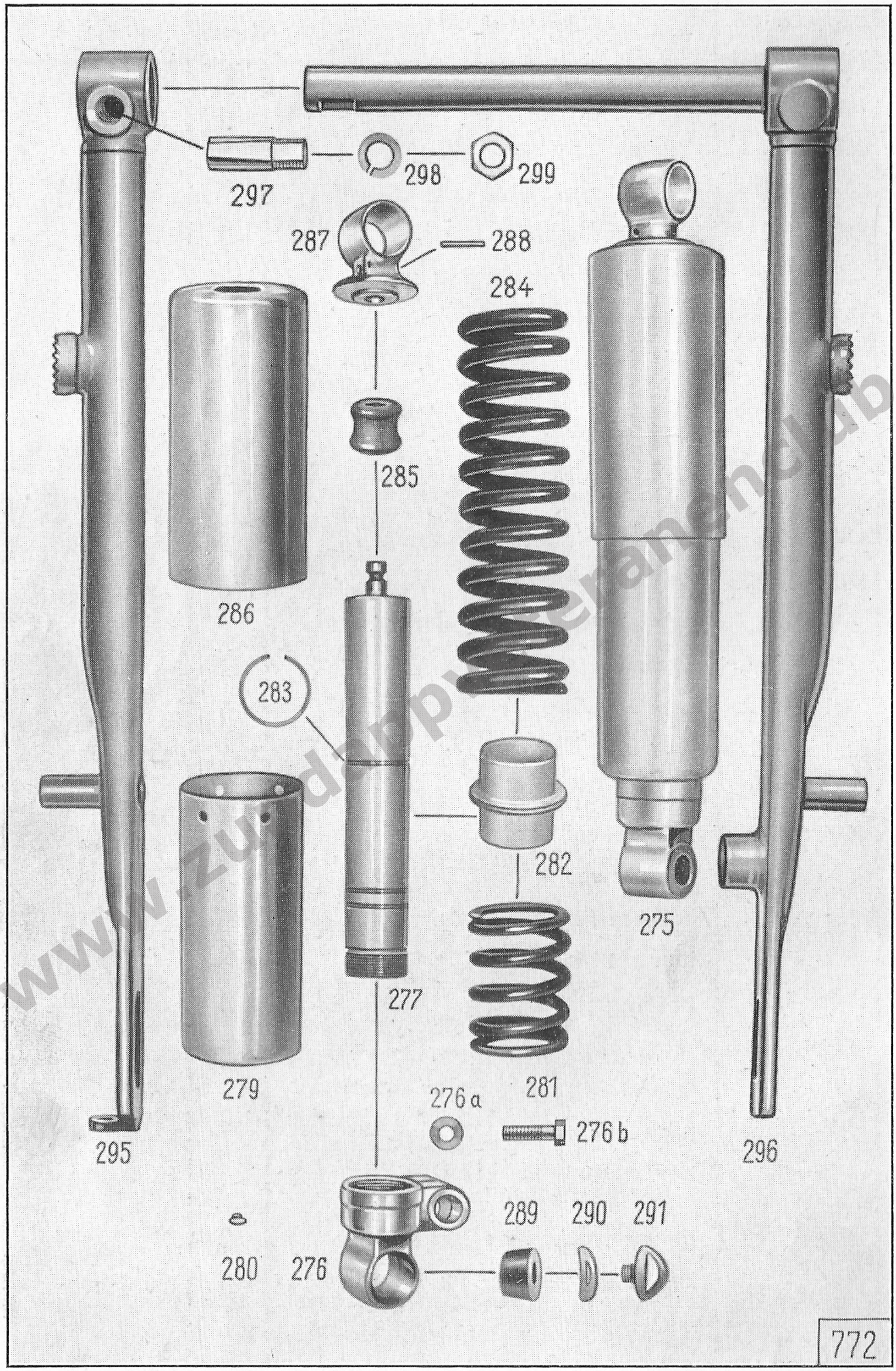

www.zundapperanenclub.nl

Illustration 13, Group R: a) Frame, Spring Leg and Swinging Arm Suspension

Key No.	Spare Part No.	Description	No. of Pieces	Remarks
		Spring Unit (so-called "Spring Leg")		
275	6350 z 113-0	spring leg with shock absorber, complete	2	
276	553 z 111	lower bar head	2	
276a	—	hex screw M 8 × 25 DIN 931 k	2	
276b	—	spring washer A 8 DIN 137 k	2	
277	6350 z 112-0	shock absorber	2	
279	170 z 209-0	protective sleeve, inner	2	
280	1127 z 5	distance bolt	12	
281	321 z 571-2	pressure spring, short	2	
282	171 z 428-3	guide tube (on shock absorber)	2	
283	1251 z 256-3	snap ring (on shock absorber)	2	
284	321 z 572-2	pressure spring, long	2	
285	616 z 243-0	rubber damper (on shock absorber)	2	
286	173 z 112-0	protective sleeve, outer	2	
287	553 z 104-0	upper bar head	2	up to F. 896600
288	—	pin 4 × 20 DIN 1472 (to fasten upper bar head and protective sleeve to shock absorber)	2	up to F. 896600
289	176 z 40-0	rubber bushing (in upper and lower bar heads)	8	
290	—	spring washer A 8 DIN 137 k	4	
291	1541 z 311-3	lock screw (to fasten spring leg to frame and swinging fork)	4	
		Swinging Arm Suspension		
295	710 z 224-8	swinging arm, left-hand	1	
296	710 k 251-0	swinging arm, right-hand, with shaft	1	
297	121 z 1085-3	cotter pin (to fasten swinging arm to shaft)	1	
298	—	spring washer A 12 DIN 127 k	1	
299	—	hex nut M 12 × 1,5 DIN 936 k	1	
—	553 z 114-0	upper bar head	2	from F. 896601
—	—	pin 4 × 20 DIN 1472 (to fasten upper bar head and protective sleeve to shock absorber)	4	from F. 896601

www.zundappveteranenclub.nl

Illustration 14, Group R: b) Dual Seat and Toolbox

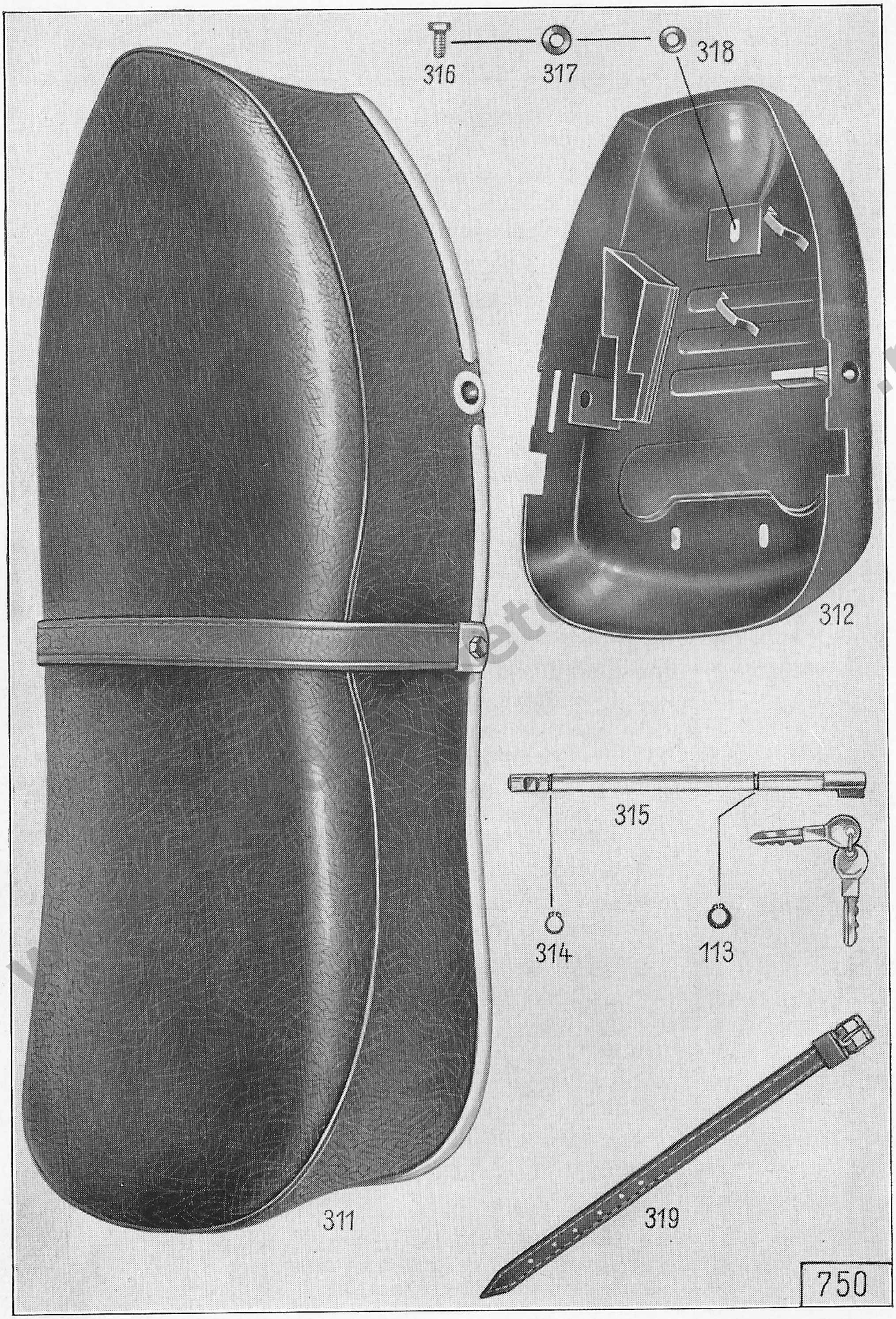

Illustration 14, Group R: b) Dual Seat and Toolbox

Key No.	Spare Part No.	Description	No. of Pieces	Remarks
		Dual Seat		
311	6330 k 52	dual seat	1	
—	6347 z 3-0	dual seat cover	1	
—	6346 z 16	foam rubber cushion	1	
—	1141 z 2170-8	supporting plate	2	
—	321 z 550-8	pressure spring	4	
—	1551 z 442-3	square screw	21	
—	1284 z 16-6	washer	21	
—	1011 z 207-3	nut	21	
—	1113 z 4-0	eyelet	1	
—	2360 k 3-0	holding strap	1	
—	1143 z 105-0	holding plate	2	
—	1141 z 2143-0	clamping plate	2	
—	—	hex screw M 6 × 15 DIN 933 crp	2	
—	—	spring washer A 6 DIN 137 k	2	
—	946 z 7	rubber band (for buttons)	1	
—	943 z 26	profile moulding, left front part	1	
—	943 z 27	profile moulding, right front part	1	
—	943 z 28	profile moulding, right front part	1	
—	943 z 29	profile moulding, rear part	1	
		Toolbox		
312	6230 z 142	toolbox	1	
313	1251 z 265	circlip G 10 × 1,2	1	
314	—	circlip 10 × 1 DIN 471	1	
315	6040 z 275	antitheft lock	1	
316	—	hex screw M 8 × 15 DIN 933 k (to fasten toolbox to frame)	3	
317	1301 z 035	washer	3	
318	—	spring washer B 8 DIN 137 k	3	
319	1390 z 118	strap (with buckle) for tools	1	

www.zundappveteranenclub.nl

Illustration 15, Group R: d) Mudguards, Front Mudguard Rear Mudguard

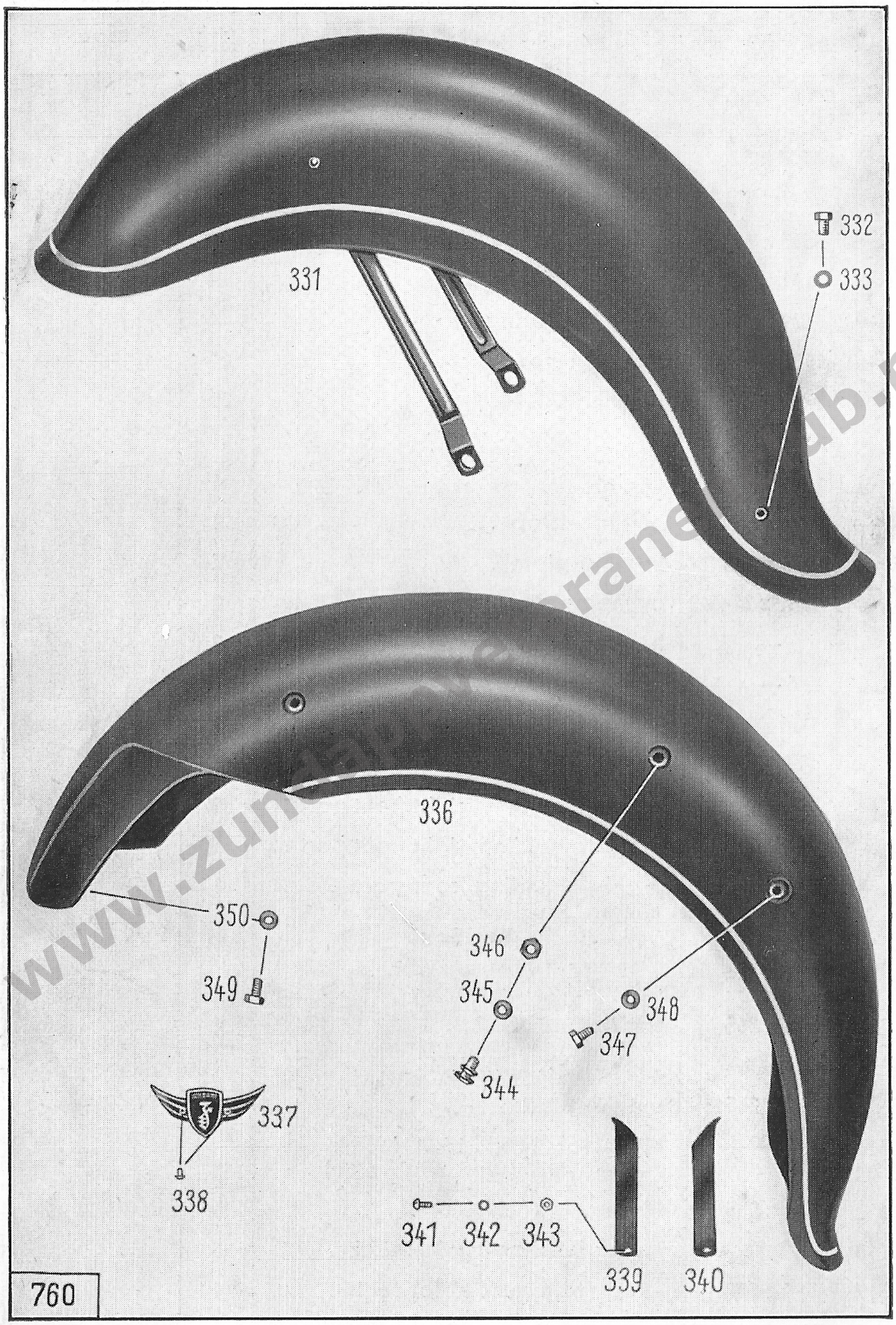

www.zundapp-crane-club.nl

Illustration 15, Group R: d) Mudguards, Front Mudguard Rear Mudguard

Key No.	Spare Part No.	Description	No. of Pieces	Remarks
		Front Mudguard		
331	6370 k 177-8	front mudguard	1	
332	—	hex screw M 6 × 10 DIN 933 k (to fasten mudguard to front swinging fork, lower part)	2	
333	—	spring washer B 6 DIN 137 k	2	
		Rear Mudguard		
336	6370 z 165-0	rear mudguard	1	
—	616 z 238	plug	1	
337	1483 z 66-8	manufacturer's plate	1	
338	—	screw, countersunk raised head, AM 3 × 6 DIN 91 crp	2	
—	—	spring washer A 3 DIN 137 k	2	
—	—	hex nut M 3 DIN 934 k	2	
339	211 z 277-2	fixing yoke, left-hand (to number plate)	1	
340	211 z 278-2	fixing yoke, right-hand (to number plate)	1	
—	1470 z 12-8	support (to number plate)	1	
341	—	screw, button head, AM 5 × 12 DIN 86 k	5	
342	—	spring washer A 5 DIN 127 k	5	
343	—	hex nut M 5 DIN 934 k	5	
344	131 z 545-3	retaining bolt for dual seat	2	
345	—	spring washer B 8 DIN 137 k	2	
346	—	hex nut M 8 DIN 934 k	2	
—	—	hex screw M 8 × 15 DIN 933 k (to fasten mudguard to frame struts, front part)	2	
—	—	spring washer B 8 DIN 137 k	2	
—	—	hex nut M 8 DIN 934 k	2	
347	—	hex screw M 8 × 10 DIN 933 k (to fasten mudguard to frame struts, rear part)	2	
348	—	spring washer B 8 DIN 137 k	2	
349	—	hex screw M 8 × 15 DIN 933 k (to fasten mudguard to frame, lower part)	1	
350	—	spring washer B 8 DIN 137 k	1	

www.zundappveteranenclub.nl

Illustration 16, Group R: d) Mudguards, Chaincase

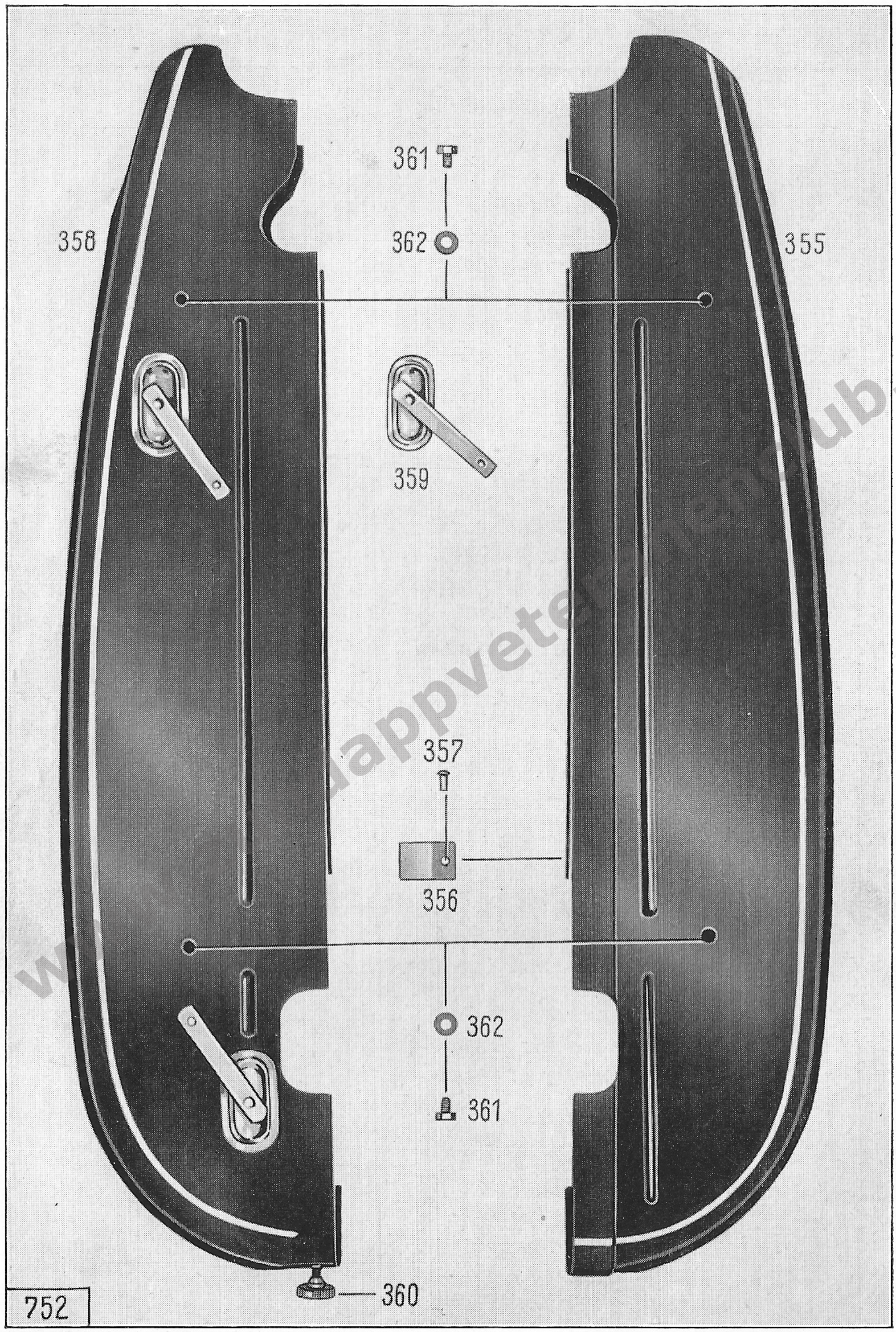

www.vappvetex.vaclub.nl

Illustration 16, Group R: d) Mudguards, Chaincase

Key No.	Spare Part No.	Description	No. of Pieces	Remarks
		Chaincase		
355	1500 z 282-8	chaincase, upper part	1	
356	331 z 330	laminated spring	4	
357	—	rivet, button head, 4 × 6 DIN 660 (to fasten laminated spring to chaincase, upper part)	4	
358	1500 z 285-0	chaincase, lower part	1	
359	230 z 230-0	cap	2	
—	331 z 303	laminated spring	2	
—	—	rivet, button head, 4 × 6 DIN 660 Alu (to fasten laminated spring to cap as well as to chaincase, lower part)	4	
—	—	spring washer B 5 DIN 137 k	2	
—	—	washer 4,3 DIN 125 k	2	
360	1021 z 103	knurled edge nut	1	
361	—	hex screw M 6 × 8 DIN 933 k (to fasten chaincase to swinging arm)	4	
362	—	spring washer B 6 DIN 137 k	4	

www.zundappveteranenclub.nl

Illustration 17, Group R: f) Fuel Tank and Fuel Pipes

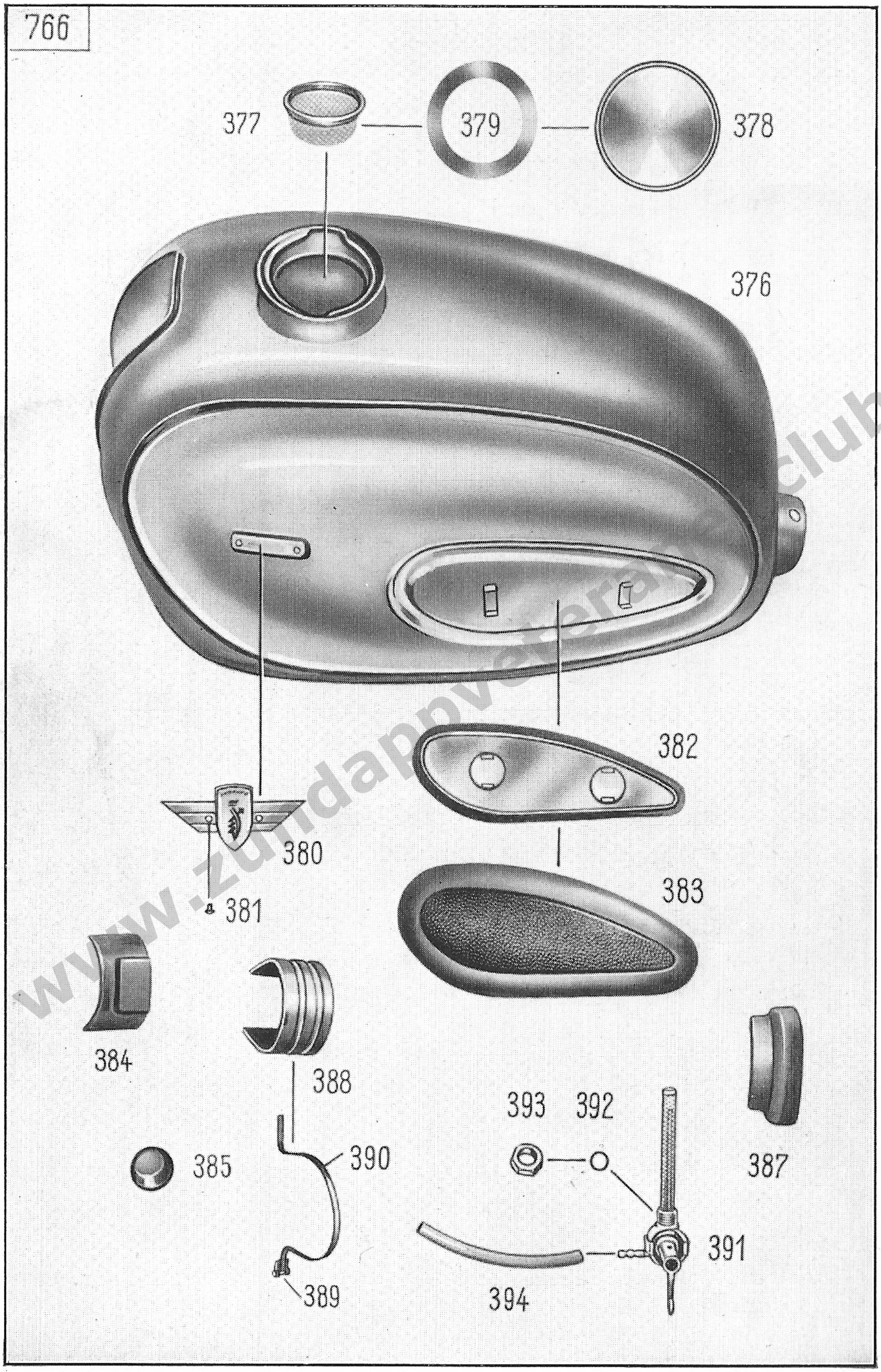

www.zundappv-club.nl

Illustration 17, Group R: f) Fuel Tank and Fuel Pipes

Key No.	Spare Part No.	Description	No. of Pieces	Remarks
		Fuel Tank		
376	6230 z 141-9	fuel tank	1	
377	2210 z 30	fuel sieve	1	
378	1850 z 26	filler cap	1	
379	2456 k 4-0	packing washer (to filler cap)	1	
380	1483 z 64-3	manufacturer's plate	2	
381	—	screw, countersunk raised head, AM 3 × 6 DIN 91 Alu elox. (for fixing the plates)	4	
382	1141 z 2119-2	bracket, left-hand	1	
—	1141 z 2120-2	bracket, right-hand	1	
—	—	screw, fillister head, AM 4 × 5 DIN 85 k (to fasten bracket to fuel tank)	4	
—	—	spring washer A 4 DIN 137 k	4	
383	616 z 248-0	knee pad, left-hand	1	
—	616 z 249-0	knee pad, right-hand	1	
384	1146 z 54	front rubber plate	1	
385	1126 z 2	supporting bolt	4	
—	1301 z 662	compensating shim	as required	
387	1146 z 55	rear rubber plate	1	
388	616 z 210	rubber sleeve	1	
389	—	hose clip "Beru" WSN 5	1	
390	—	hose band "Beru" 5 × 300 mm	1	
		Fuel Tap		
391	6010 z 165-0	fuel tap	1	
—	2303 k 4-0	toggle (to fuel tap)	1	
—	—	cylindrical screw M 5 × 40 DIN 84 (to toggle)	1	
392	—	packing washer A 10 × 14 DIN 7603	1	
393	1001 z 55	nut	1	
		Fuel Pipes		
394	—	fuel hose A 5 × 9 × 100 DIN 73 379	1	

www.zundappveteranenclub.nl

Illustration 18, Group R: h) Exhaust Set

www.zundappveteranenclub.nl

Illustration 18, Group R: h) Exhaust Set

Key No.	Spare Part No.	Description	No. of Pieces	Remarks
		Exhaust Set		
401	1350 z 152-4	exhaust pipe	1	
402	—	hex screw AM 6 × 12 DIN 933 k (to fasten exhaust pipe to cylinder)	1	
403	—	spring washer A 6 DIN 127 k	1	
404	6030 z 332-4	silencer	1	
405	2271 k 14-4	silencer-end piece	1	
406	1441 z 301-2	clamp (to fasten silencer to exhaust pipe)	1	
407	1140 z 1265-8	bracket	1	
408	—	hex screw M 8 × 22 DIN 933 k (to fasten clamp to bracket)	1	
409	—	spring washer A 8 DIN 127 k	1	
410	—	hex nut M 8 DIN 934 k	1	
411	—	hex screw M 8 × 15 DIN 933 k (to fasten silencer to strut tube)	1	
412	—	spring washer A 8 DIN 127 k	1	

www.zundappveteranenclub.nl

Illustration 19, Group R: i) Front Wheel Swinging Arm Suspension

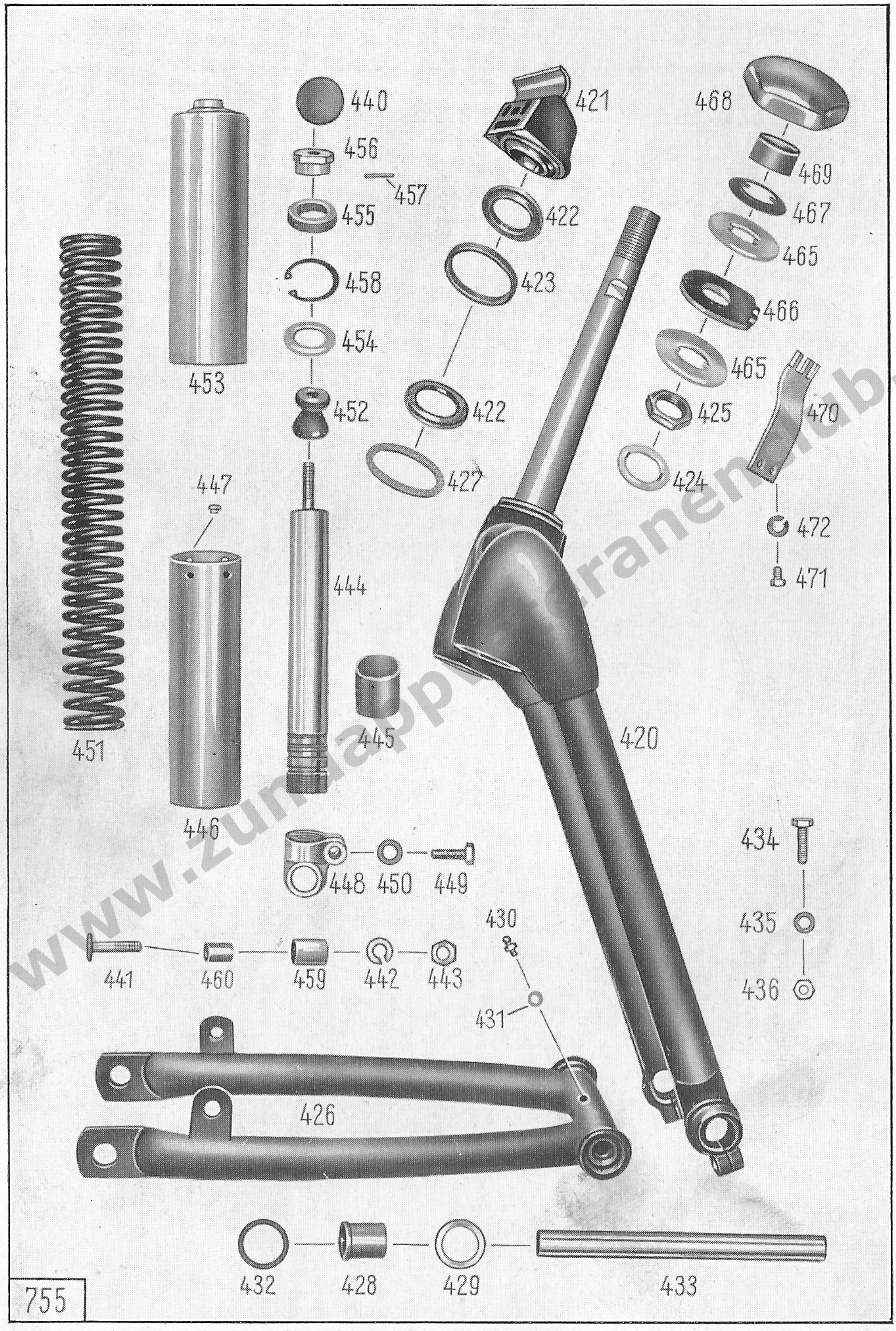

www.zundapp-oranenlab.nl

Illustration 19, Group R: i) Front Wheel Swinging Arm Suspension

Key No.	Spare Part No.	Description	No. of Pieces	Remarks
		Front Wheel Swinging Arm Suspension		
—	6810 k 224-0	front wheel swinging arm suspension, complete	1	
420	6800 z 102-8	swinging fork	1	
421	1200 z 158-0	upper bearing (for direction)	1	
422	1871 z 170	fork race	1	
423	1236 z 347	rubber ring	1	
—	—	ball 6,35 mm III DIN 5401	19	
424	1291 z 107-3	safety washer	1	
425	1001 z 225-3	hex nut	1	
426	710 z 238-8	swinging arm suspension	1	
422	1871 z 170	fork race	1	
—	—	ball 6,35 mm III DIN 5401	19	
427	1236 z 333	packing washer	1	
428	184 z 535	bushing	2	
429	1301 z 1035	washer	2	
430	—	grease nipple D 6 DIN 71 412	1	
431	—	packing washer A 6 x 10 DIN 7603 Alu	1	
432	1236 z 321	rubber ring	2	
433	1921 z 708	shaft for swinging fork	1	
434	—	hex screw M 8 × 28 DIN 931 k (to fasten swinging arm suspension to shaft)	2	
435	—	spring washer A 8 DIN 127 k	2	
436	—	hex nut M 8 DIN 934 k	2	
		Spring Unit (so-called "Spring Leg")		
—	6350 z 130-0	spring unit, complete, with hydraulic shock absorber	2	
440	1146 z 101	rubber plate (to spring unit, within swinging fork, at top)	2	
441	1541 z 318-4	fixing screw (to spring unit at swinging arm suspension, at bottom)	2	
442	—	spring washer A 10 DIN 127 k	2	
443	—	hex nut M 10 × 1 DIN 936 k	2	

www.zundappveteranenclub.nl

www.zundappveteranenclub.nl

Illustration 19, Group R: i) Front Wheel Swinging Arm Suspension

Key No.	Spare Part No.	Description	No. of Pieces	Remarks
444	6350 z 129	hydraulic shock absorber	2	
445	177 z 111	sleeve (on shock absorber)	4	
446	173 z 118	protective sleeve, inner	2	
447	1127 z 5	distance bolt	12	
448	553 z 110	bar head, lower	2	
449	—	hex screw M 8 × 25 DIN 931 k (to fasten hydraulic shock absorber into lower bar head)	2	
450	—	spring washer A 8 DIN 137 k	2	
451	321 z 592-2	pressure spring	2	
452	616 z 261	rubber damper	2	
453	173 z 119	protective sleeve, outer	2	
454	1301 z 1027-3	washer	2	
455	1236 z 345	rubber ring	2	
456	181 z 360-3	bushing (with collar)	2	
457	—	pin 3 × 20 DIN 1473	2	
458	—	circlip 38 × 1,5 DIN 472 (to fasten spring unit to swinging fork, at top)	2	
459	176 z 42	rubber bushing (to spring unit, at bottom)	2	
460	1331 z 900	distance tube (to spring unit, at bottom)	2	
		Steering damper		
465	1301 z 1026-8	washer	2	
466	1289 z 101	damper washer	1	
467	1291 z 108	spring washer	1	
468	1420 z 13-4	knob	1	
469	176 z 43-0	rubber bushing (to knob)	1	
470	1141 z 2205-3	bracket	1	
471	—	hex screw M 6 × 10 DIN 933 k (to fasten bracket to frame)	2	
472	—	spring washer A 6 DIN 127 k	2	

www.zundappveteranenclub.nl

Illustration 20, Group R: k) Handlebar and Handlevers with Cables

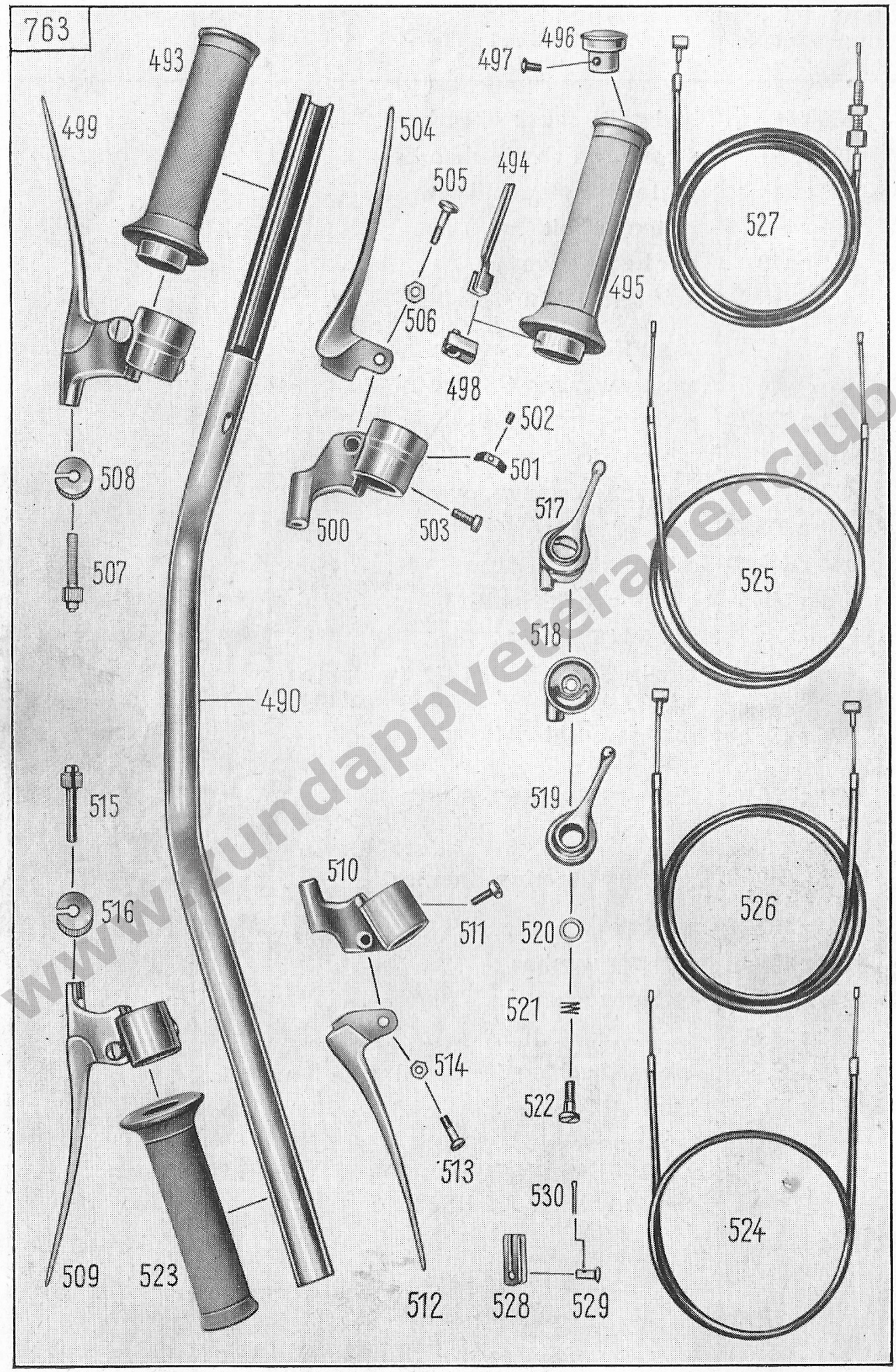

www.-undappveteranenclub.nl

Illustration 20, Group R: k) Handlebar and Handlevers with Cables

Key No.	Spare Part No.	Description	No. of Pieces	Remarks
		Handlebar		
490	1371 z 162-4	handlebar	1	
		Handlevers		
493	170 z 218	throttle twist grip	1	colour of rubber = grey
494	2253 k 7-0	sliding block	1	
495	2250 k 7-0	grip tube with rubber	1	colour of rubber = grey
—	2256 k 5-0	rubber sleeve	1	
496	2251 k 5-0	lock cap	1	
497	—	screw, countersunk raised head, AM 5 × 10 DIN 91 k	1	
498	2253 k 3-0	cable support	1	
499	670 z 211	brake lever with cable adjustment	1	
500	2263 k 5-0	joining piece	1	
501	2261 k 2-0	brake spring	1	
502	2261 k 3-3	adjusting screw	1	
503	2261 k 4-3	screw, fillister head (to joining piece)	1	
504	2263 k 6-0	brake lever	1	
505	2261 k 5-5	lever screw	1	
506	—	hex nut M 6 DIN 934 crp	1	
507	2261 k 6-5	adjusting screw	1	
508	2263 k 7-0	knurled edge nut	1	
509	670 z 213	clutch lever with cable adjustment	1	
510	2263 k 1-0	joining piece	1	
511	2261 k 4-3	screw, fillister head (to joining piece)	1	
512	2263 k 8-0	clutch lever	1	
513	2261 k 7-3	lever screw	1	
514	—	hex nut M 5 DIN 934 crp	1	
515	2261 k 6-5	adjusting screw	1	
516	2263 k 7-0	knurled edge nut	1	
517	670 z 226-0	air lever	1	
518	2263 k 29-0	housing	1	
519	2263 k 28-4	air lever	1	
520	2263 k 27-0	washer	1	
521	2261 k 23-0	pressure spring	1	
522	2261 k 21-4	screw, fillister head	1	
523	616 z 232	grip	1	colour of rubber = grey

www.zundappveteranenclub.nl

www.zundappveteranenclub.nl

Illustration 20, Group R: k) Handlebar and Handlevers with Cables

Key No.	Spare Part No.	Description	No. of Pieces	Remarks
		Cables		
524	6290 k 435-0	cable for carburettor	1	
—	—	nipple C DIN 71 988	2	
—	—	sleeve C 2,5 DIN 71 987	2	
525	6290 z 434-0	cable for air lever	1	
—	—	nipple C DIN 71 988	2	
—	—	sleeve C 2,5 DIN 71 987	2	
526	6290 z 473-0	cable for clutch	1	
—	—	nipple seat A DIN 71 988	2	
—	—	nipple B 2,3 DIN 71 988	2	
—	—	sleeve C 3 DIN 71 987	2	
—	1063 z 7-0	nipple	1	
527	6290 k 450-0	cable for front brake	1	
—	144 z 04	cable end	1	
—	—	nipple seat A DIN 71 988	1	
—	—	nipple B 2,3 DIN 71 988	1	
—	—	sleeve C 3 DIN 71 987	2	
—	171 z 442-3	sleeve	1	
—	616 z 263-0	rubber cover	1	
528	551 z 108	yoke	1	
529	131 z 516	bolt (to yoke)	1	
530	—	split pin 1,5 × 15 DIN 94	1	

www.zundappveteranenclub.nl

Illustration 21, Group B: a) Brakes, Handbrake

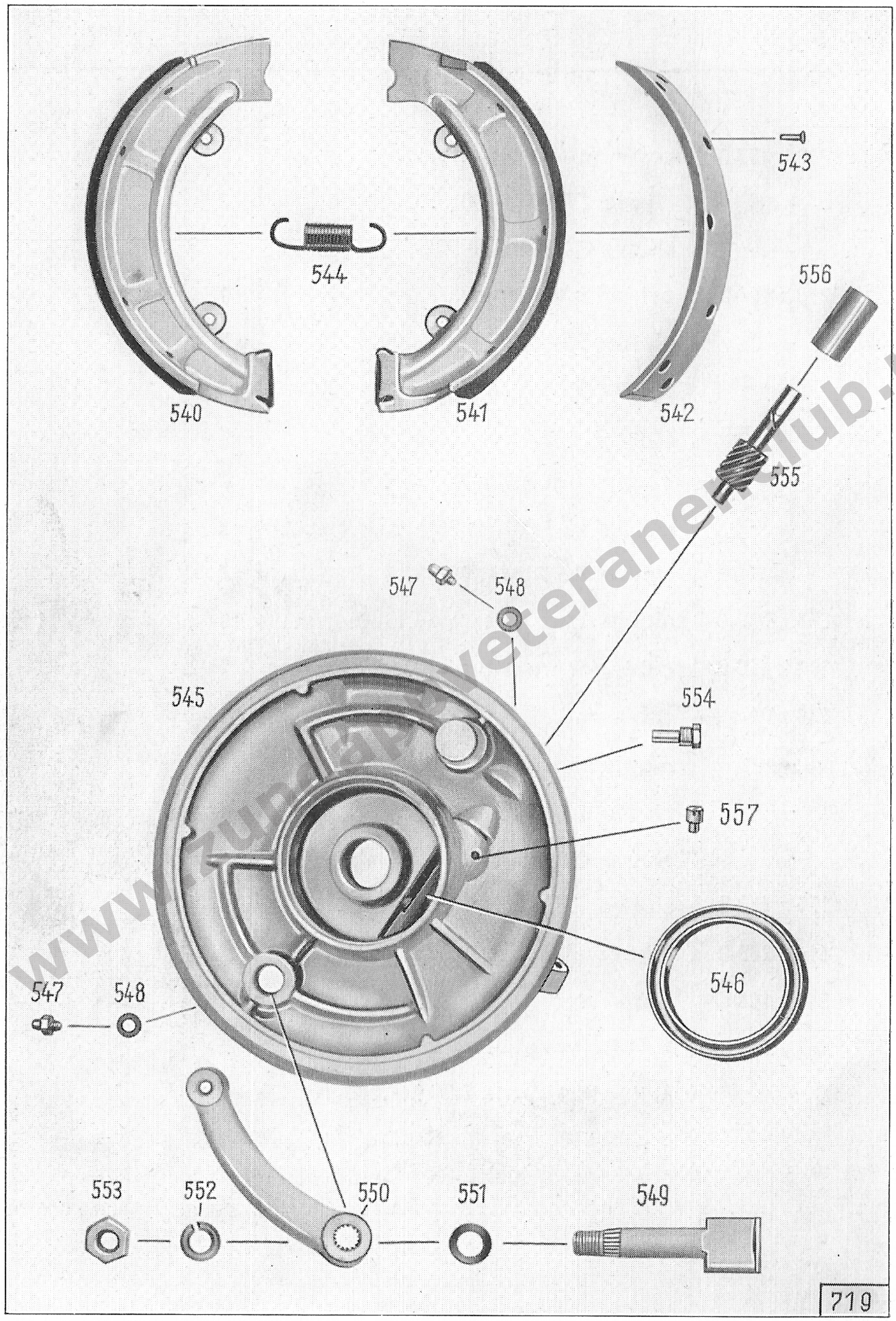

www.rupsveteranenclub.nl

Key No.	Spare Part No.	Description	No. of Pieces	Remarks
		Handbrake		
540	20 k 110	brake shoe with lining, left-hand ..	1	lining fastened with paste
541	20 k 111	brake shoe with lining, right-hand .	1	
542	49 z 103	brake lining	2	for being riveted onto the brake shoes
543	1044 z 11	cylindrical rivet	14	
544	321 z 310	return spring (between brake shoes)	2	
545	230 z 240-0	brake cover	1	
546	—	radial gasket (oil seal) A 50 × 65 DIN 6503	1	
547	1080 z 1	grease nipple	2	
548	—	packing washer A 6 × 10 DIN 7603 Alu	2	
549	1100 z 106	brake cam	1	
550	671 z 324	brake lever	1	
551	1236 z 06	rubber sleeve (between brake lever and brake cover)	1	
552	—	spring washer A 10 DIN 127 k	1	
553	—	hex nut M 10 DIN 934 k	1	
554	1551 z 17	hex screw (to fasten speedometer cable to brake cover)	1	
—	—	washer 8,4 DIN 433 k	1	
555	2121 z 6	screw pinion	1	
556	182 z 301	bushing (to screw pinion)	1	
557	—	pin (with thread) M 6 × 4 × 2,5 DIN 926 (to fasten bushing in brake cover)	1	

www.zundappveteranenclub.nl

Illustration 22, Group B: a) Brakes, Footbrake

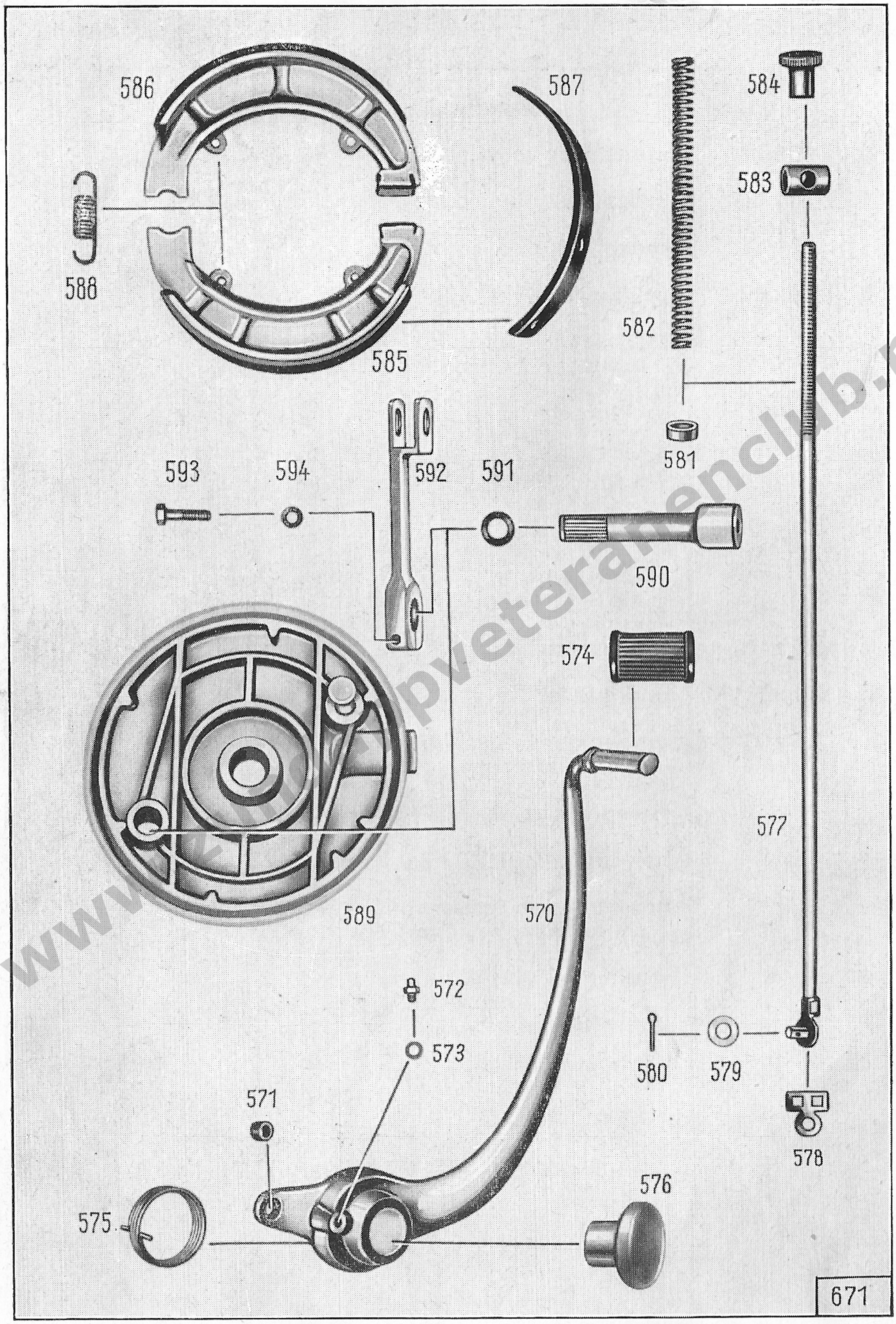

www.kreidler-petersfehnclub.nl

Key No.	Spare Part No.	Description	No. of Pieces	Remarks
		Footbrake		
570	700 z 123-0	footbrake lever	1	
571	181 z 361-0	bushing (in footbrake lever)	1	
572	1080 z 1	grease nipple	1	
573	—	packing washer A 6 × 10 DIN 7603	1	
574	—	rubber sleeve B DIN 73 483	1	
575	321 z 532	return spring	1	
576	—	lock screw M 20 × 1,5 DIN 908 k	1	
—	1301 z 1008-0	spacer washer	1	
577	1650 k 120-0	footbrake rod with stop clamp	1	
578	1441 z 308-2	stop clamp	1	
579	—	washer 7,4 DIN 125 k	1	
580	—	split pin 2 × 15 DIN 94 k	1	
581	1241 z 358-3	ring	1	
582	321 z 512	spiral spring	1	
583	121 z 1117-3	brake lever pin	1	
584	1023 z 102-0	knurled edge nut (to fasten brake rod to rear brake lever)	1	
585	20 k 110	brake shoe with lining, left-h.	1	lining fastened with paste
586	20 k 111	brake shoe with lining, right-h.	1	
587	49 z 103	brake lining	2	for being riveted onto the brake shoes
—	1044 z 11	cylindrical rivet	14	
588	321 z 310	return spring (between brake shoes)	2	
589	230 z 243-0	brake cover	1	
—	—	hex screw M 6 × 55 DIN 933 k (for chain tightening at right-hand side in brake cover)	1	
—	—	hex nut M 6 DIN 934 k	1	
—	1080 z 1	grease nipple	1	
—	—	packing washer A 6 × 10 DIN 7603 Alu	1	
590	1100 z 105	brake cam	1	
591	1236 z 06	packing washer (on brake cam)	1	
592	671 z 337-3	brake lever	1	
593	—	hex screw M 6 × 20 DIN 931 k (to fasten brake lever to brake cam)	1	
594	—	spring washer A 6 DIN 127 k	1	

www.zundappveteranenclub.nl

Illustration 23, Group B: b) Wheels, Front Wheel

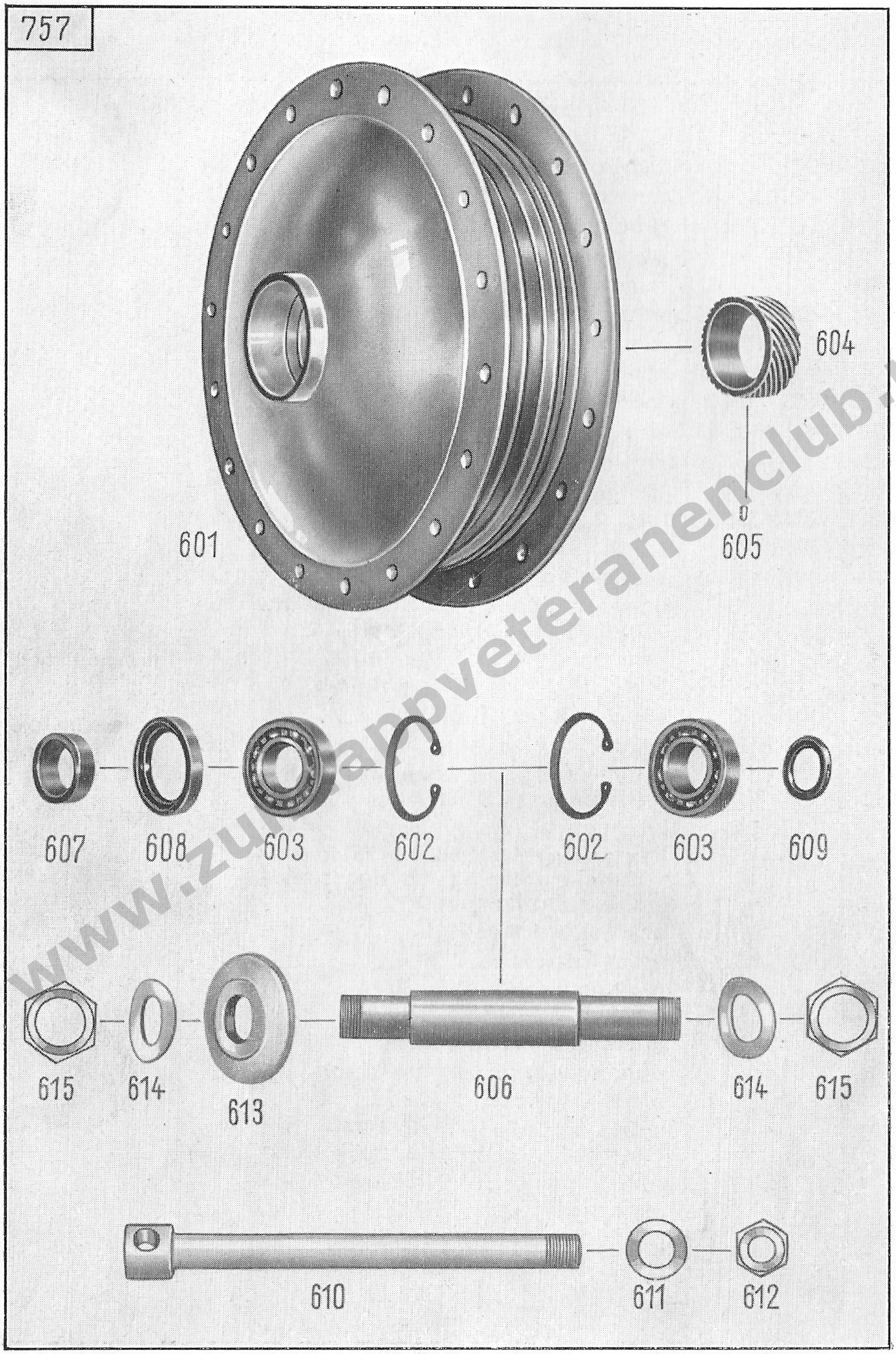

www.zundappveteranenclub.nl

Key No.	Spare Part No.	Description	No. of Pieces	Remarks
		Front Wheel		
—	6660 k 218-0	front wheel without tyre	1	
—	6620 k 215-0	front wheel hub	1	
601	483 z 312-0	hub shell	1	
602	—	circlip 42 × 1,75 DIN 472	2	
603	—	ball bearing 6004 DIN 625	2	
604	2121 z 73-0	screw gear	1	
605	—	pin 3 × 6 DIN 1473 (to fasten screw gear in hub shell)	1	
606	121 z 1135	axle tube	1	
607	181 z 355-6	distance bushing	1	
608	—	radial gasket (oil seal) A 30 × 42 DIN 6503	1	
609	1301 z 1021-0	distance washer (side of brake cover)	1	
610	131 z 543-3	front wheel axle	1	
611	—	washer 15 DIN 125 k	1	
612	—	hex nut M 14 × 1,5 DIN 336 k	1	
613	781 z 427-3	covering washer (left-hand side) ..	1	
614	—	spring washer B 20 DIN 137 k	2	
615	1001 z 215	hex nut	2	
—	361 z 102-4	rim	1	
—	401 z 204-3	spoke 4 × 105 mm	36	
—	411 z 101-3	nipple	36	

www.zundappveteranenclub.nl

Illustration 24, Group B: b) Wheels, Rear Wheel

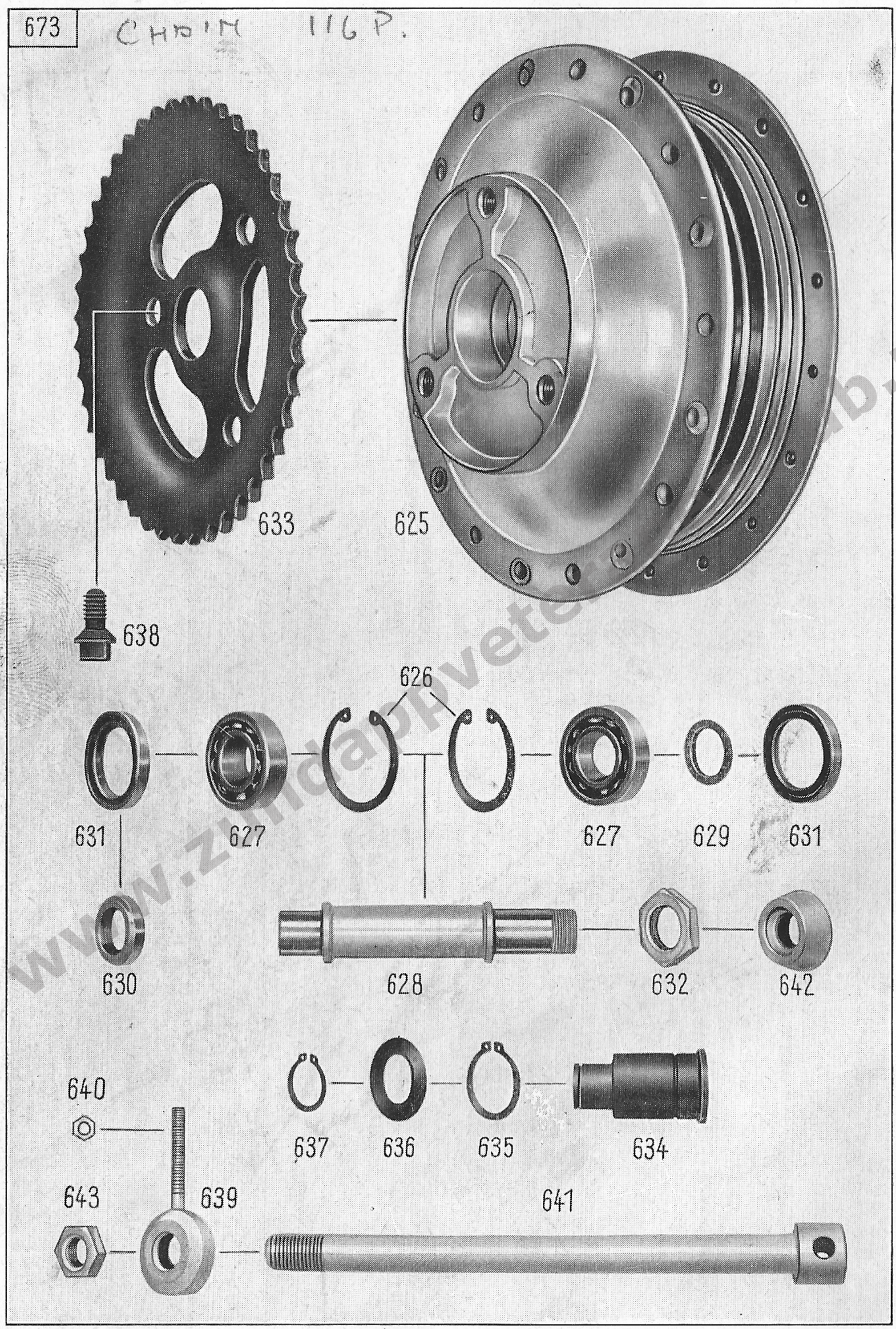

www.zundapvetera.nl

Illustration 24, Group B: b) Wheels, Rear Wheel

Key No.	Spare Part No.	Description	No. of Pieces	Remarks
		Rear Wheel		
—	6660 k 226-0	rear wheel without tyre	1	
—	6620 k 221-0	rear wheel hub	1	
625	483 z 325-0	hub shell	1	
—	181 z 364-3	bushing (with collar)	36	
626	—	circlip 42 × 1,75 DIN 472	2	
627	—	ball bearing 6004 DIN 625	2	
628	121 z 1090-6	axle tube	1	
629	1301 z 1008-3	distance washer (side of brake cover)	1	
630	181 z 333-0	distance bushing (side of toothed wheel rim)	1	
631	—	radial gasket (oil seal) A 30 × 42 DIN 6503	2	
632	1001 z 215	hex nut (to fasten brake cover to hub shell)	1	
—	361 z 102-4	rim	1	
—	401 z 204-3	spoke 4 × 105 mm	36	
—	411 z 101-3	nipple	36	
633	2071 z 216-2	toothed wheel rim, 44 teeth	1	for solowork
634	181 z 335-2	retaining bushing	1	
635	—	circlip 28 × 1,5 DIN 471	1	
—	1281 z 32	washer	1	
636	1301 z 672	washer	1	
637	—	circlip 20 × 1,2 DIN 471	1	
638	1551 z 429	square screw (to fasten toothed wheel rim to rear wheel)	3	
639	1110 k 201	chain tightener, left-hand	1	
640	—	hex nut M 6 DIN 934 k	2	
641	131 z 533-3	rear wheel axle	1	
642	1241 z 352-3	distance ring	1	
—	—	washer 15 DIN 125 k	1	
643	—	hex nut M 14 × 1,5 DIN 936 k (to rear wheel axle)	1	
—	—	roller chain, 116 links incl. lock 1 × 12,7 × 7,75 DIN 8180	1	
—	—	cranked double link 1 D 12,7 × 7,75 DIN 8180	1	
—	—	lock 1 E 12,7 × 7,75 DIN 8180	1	

www.zundappveteranenclub.nl

Illustration 25, Group E: a) Electrical Equipment, Headlight Battery, Conducts

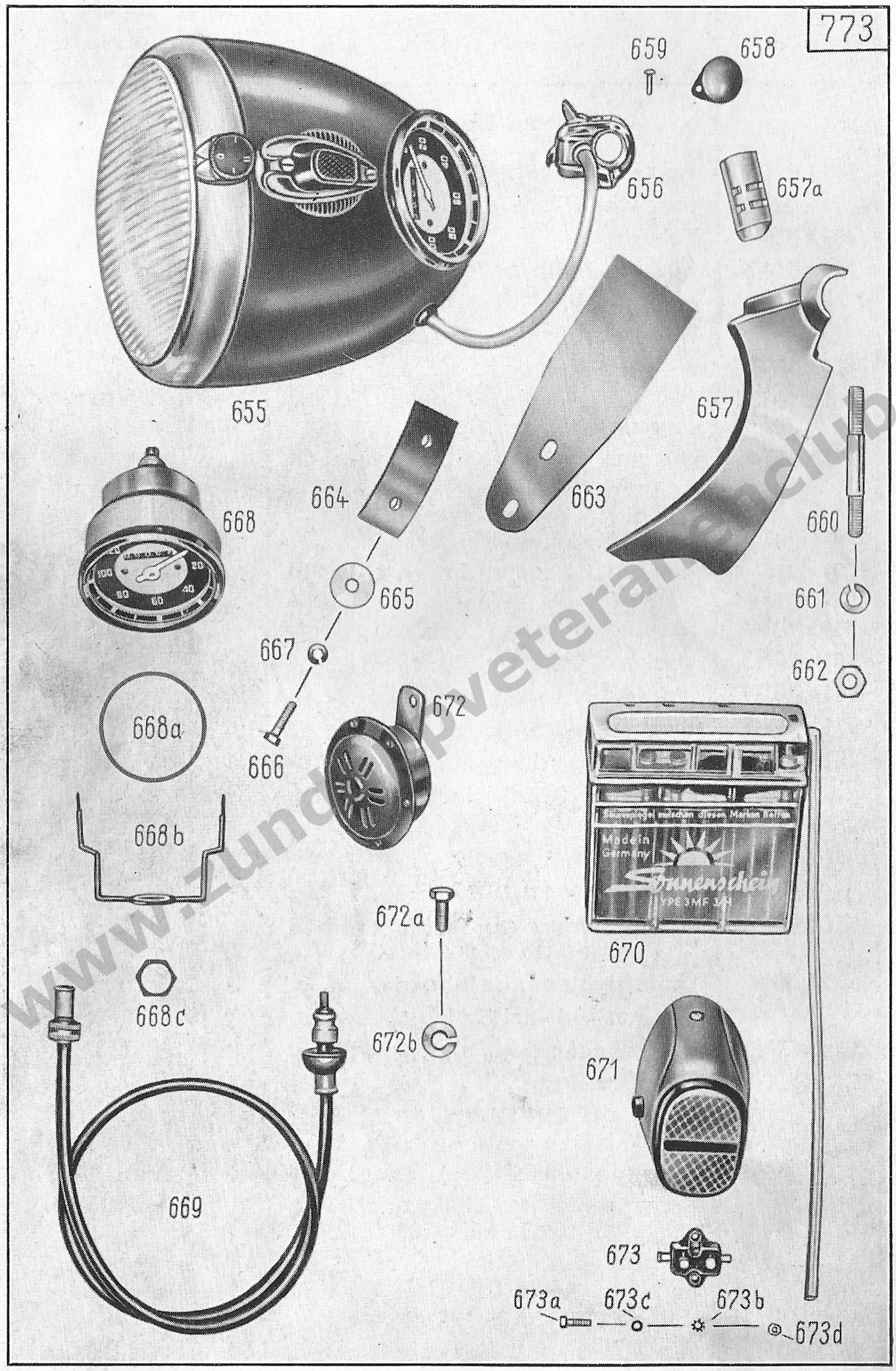

www.zundapveteranenclub.nl

Illustration 25, Group E: a) Electrical Equipment, Headlight

Key No.	Spare Part No.	Description	No. of Pieces	Remarks
		Headlight		
655	6090 z 122-9	headlight complete with dip switch, ignition key, without bulbs, speedometer, and conducts	1	
—	2310 k 57-8	headlight housing	1	
—	2310 k 58-0	reflector	1	
—	2310 k 59-4	lock rim with adjusting screw	1	2310K63 ~~EARLY~~ RIM WITH PIN OPERATION OF FOCUS
—	2317 k 3-0	headlight glass	1	
—	2316 k 4-0	sealing ring (to headlight glass) ..	1	
—	2311 k 39-3	retaining spring (to headlight glass)	6	
—	2310 k 60-0	ignition-light switch	1	
—	2310 k 55-0	retaining clip (to ignition-light switch)	1	
—	2340 k 5-0	ignition-light switch cover	1	
—	2311 k 37-4	distance screw, short	1	
—	2311 k 38-4	distance screw, long	1	
—	2310 z 33-0	ignition key	1	
—	—	rubber grommet A DIN 72 613 (for conduct passage)	2	
—	2310 k 18-5	holder (to Bilux bulb)	1	
—	2311 k 23-3	return spring (to holder)	1	
656	6160 z 166	dip switch (on handlebar)	1	
—	2340 k 4-0	set of cables, 4 lines (from dip switch to headlight)	1	
—	2346 k 1-0	rubber grommet (to set of cables)	1	
—	—	Bilux bulb B 6 V 35/35 W DIN 72 601	1	Osram 7324
—	—	parking light bulb H 6 V 2 W DIN 72 601	1	Osram 3895

www.zundappveteranenclub.nl

Illustration 25, Group E: a) Electrical Equipment, Headlight Speedometer

Key No.	Spare Part No.	Description	No. of Pieces	Remarks
—	—	charge control bulb J 6 V 1,2 W DIN 72 601	1	Osram 3799
657	630 z 502-0	headlight carrier	1	
657a	171 z 453-3	bushing (to antitheft lock)	1	
658	780 z 110	cap (to antitheft lock)	1	
659	1691 z 315-3	pin	1	
660	—	stud M 10 × 60 DIN 940 k (to fasten headlight carrier to upper bearing for direction) ..	2	
661	—	spring washer A 10 DIN 127 k	2	
662	—	hex nut M 10 DIN 934 k	2	
663	1146 z 102	rubber plate (below headlight) ..	1	
664	1141 z 2206-2	reinforcing plate	1	
665	1301 z 1043-3	washer	2	
666	—	hex screw M 6 × 22 DIN 931 k (for fixing headlight)	2	
667	—	spring washer A 6 DIN 127 k	2	
		Speedometer		
668	6770 z 67-4	speedometer with lighting incorporated (make VDO)	1	
—	6770 z 69-4	speedometer (VDO) indicating miles	1	
668a	2426 k 1-0	rubber ring	1	
—	2424 k 1-0	bulb holder	1	
—	—	bulb J 6 V 1,2 W DIN 72 601	1	Osram 3799
668b	2421 k 9-3	retaining clip	1	
668c	2421 k 6-2	hex nut (to retaining clip)	1	
—	6770 z 68-4	speedometer with lighting incorporated (make Veigel)	1	
—	2426 k 1-0	rubber ring	1	
—	2424 k 1-0	bulb holder	1	
—	—	bulb J 6 V 1,2 W DIN 72 601	1	Osram 3799
—	2421 k 10-3	retaining clip	1	
—	2421 k 6-2	hex nut (to retaining clip)	1	
669	6790 z 116-0	cable for speedometer drive	1	
—	—	rubber grommet D DIN 72 613 (to headlight)	1	
—	1806 z 36	rubber grommet (to front wheel hub)	1	

www.zundappveteranenclub.nl

Illustration 25, Group E: a) Electrical Equipment, Battery, Taillight, Horn, Brakelight Pressure Switch

Key No.	Spare Part No.	Description	No. of Pieces	Remarks
		Battery		
670	6060 z 103-0	battery (terminals inside) 6 V 8 Ah L	1	
—	1146 k 60	battery base	1	
—	1146 z 74	battery support	1	
—	1391 z 165	tie	1	
—	1331 z 807	spacer tube (to jockey pulley)	1	at option
—	1331 z 804	spacer tube (to jockey pulley)	1	at option
—	1401 z 02	jockey pulley	1	
—	1401 z 01	jockey pulley	1	
—	—	cylindrical screw CM 6 × 40 DIN 84 (to jockey pulley)	1	
		Taillight		
671	6110 z 48-8	brake-tail-number plate-light	1	
—	2320 k 2-8	cap	1	
—	1146 z 81	rubber plate	1	
—	2320 k 3-0	glass (to cap)	1	
—	—	bulb K 6 V 15 W DIN 72 601 (for brake light)	1	Osram 6452
—	—	bulb M 6 V 3 W DIN 72 601 (for tail-number plate-light)	1	Osram 6427
—	—	screw, button head, AM 5 × 15 DIN 86 k	2	
—	—	shake-proof (toothed) washer J 5,3 DIN 6798 K	2	
—	—	hex nut M 5 DIN 934 k	2	
		Horn		
672	6130 z 25-8	horn	1	
672a	—	hex screw M 8 × 20 DIN 933 k (to fasten horn to headlight carrier)	1	
672b	—	spring washer A 8 DIN 127 k	1	
		Brakelight Pressure Switch		
673	6160 z 158	brakelight pressure switch	1	
673a	—	cylindrical screw AM 4 × 15 DIN 84 k (to fasten switch to frame)	2	
673b	—	shake-proof (toothed) washer A 4,3 DIN 6797 k	2	
673c	—	washer 4,3 DIN 125 k	2	
673d	—	hex nut M 4 DIN 934 k	2	

www.zundapveteranenclub.nl

www.zundappveteranenclub.nl

Illustration 25, Group E: a) Electrical Equipment, Conducts

Key No.	Spare Part No.	Description	No. of Pieces	Remarks
		Electrical Conducts		
		Please order cables and sleeves resp. hoses by meters		
—	—	cable B 1,5 DIN 72 551 black		
—	—	cable B 1,5 DIN 72 551 blue		
—	—	cable B 1,5 DIN 72 551 green		
—	—	cable B 1,5 DIN 72 551 red		
—	—	cable B 1,5 DIN 72 551 yellow		
—	760 z 270-0	set of cables (for headlight)	1	
—	—	cable shoe A 5 × 3 DIN 46 211	4	
—	—	cable shoe A 6 × 3,3 DIN 46 211 ..	1	
—	—	rubber hose 8 × 6		
—	—	rubber hose 10 × 8		
—	—	rubber hose 12 × 10		
—	—	rubber hose 14 × 12		
—	—	rubber hose 14 × 10		

www.zundapp-veteranenclub.nl

Illustration 26, Group E: a) Electrical Equipment, Battery-Lighting-Ignition Set

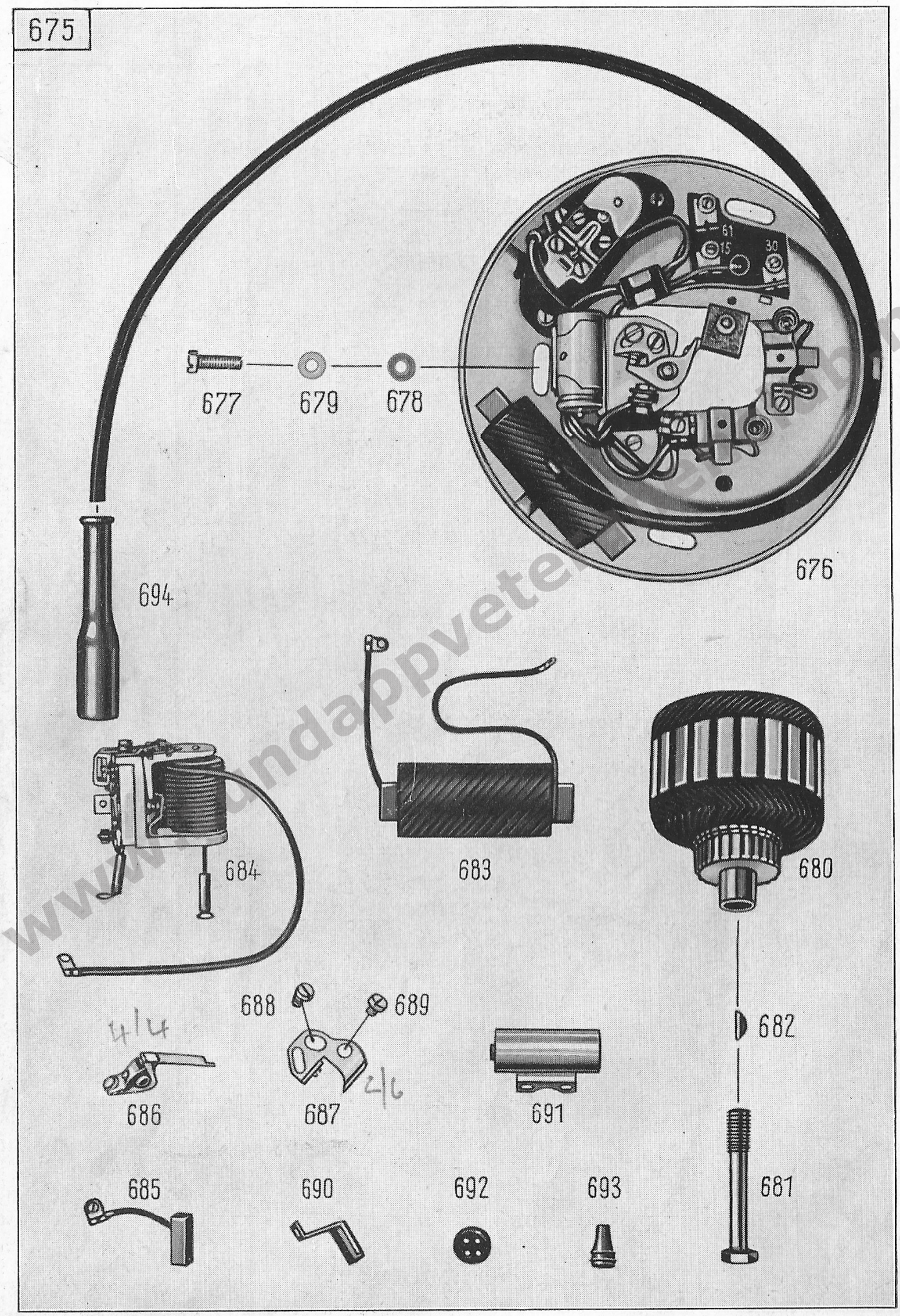

www.zundappvet.nl

Illustration 26, Group E: a) Electrical Equipment, Battery-Lighting-Ignition Set

Key No.	Spare Part No.	Description	No. of Pieces	Remarks
		Battery-Lighting-Ignition Set		
676	6070 z 209-0	generator, model Noris MLZn 60/6/1600 R	1	
677	—	cylindrical screw AM 6 × 18 DIN 84 k (to fasten generator to crankcase)	3	
678	—	washer 6,4 DIN 125 k	3	
679	—	spring washer B 6 DIN 137 k	3	
680	2290 k 38-0	armature	1	
681	2291 k 19-2	hex screw (to fasten armature to crankshaft)	1	
682	—	key 4 × 5 DIN 6888 (to armature) ..	1	
683	2290 k 22-0	ignition coil without ignition cable	1	
684	2290 k 29-0	regulator	1	
—	2299 k 1-0	regulator plate	1	
685	2290 k 3-0	carbon brush with cable	2	
686	2290 k 30-6	contact breaker arm with contact	1	
687	2290 k 31-0	contact bracket	1	
688	2291 k 26-3	eccentric screw	1	
689	—	cylindrical screw M 4 × 6 DIN 84 k	1	
690	2290 k 6-0	laminated spring with felt	1	
691	2290 k 7-3	condenser	1	
692	2296 k 8	rubber grommet (for light cable)	1	
693	2296 k 6-0	rubber grommet (for ignition cable)	1	
—	616 z 241	rubber grommet (for set of cables)	1	
—	—	ignition cable 7 mm ⌀ × 0,82 mm² DIN 72 561 (please quote length when ordering)	1	
—	1441 z 295	clamp (to ignition cable)	1	
694	6080 k 103	spark plug cover (make Bosch) ..	1	
—	6080 k 104	spark plug cover (make Beru)	1	
—	—	spark plug with packing washer 14 DIN 72 502	1	Bosch W 240 P 11 S or Beru 240/14 u 2 or Lodge H/4

www.zundappveteranenclub.nl

Illustration 27, Group W: Tools

www.zundapveteranenclub.nl

Key No.	Spare Part No.	Description	No. of Pieces	Remarks
		Tools		
—	6890 k 42-0	toolbag with set of tools	1	
700	6040 z 263	toolbag	1	
701	—	double end spanner 7 × 9 mm DIN 895 k	1	
702	—	double end spanner 8 × 10 mm DIN 895 k	1	
703	—	double end spanner 14 × 17 mm DIN 895 k	1	
704	—	double end spanner 19 × 22 mm DIN 895 k	1	
705	2021 z 54	square socket wrench, opening 12 mm SW	1	
706	2021 z 57	square socket wrench	1	
707	2020 z 15	socket wrench, opening 21 mm SW	1	
708	2009 z 102	double screwdriver (exchangeable)	1	
709	2001 z 01	tyre lever	2	
710	6040 k 269	box with rubber repairing material	1	obtainable on the market
711	2208 k 12	cleaning cloth	1	
712	6040 z 255	air pump	1	
713	—	pliers (combined pliers) 160 DIN 5244	1	
—	1596 z 401	cover for repairing box	1	

www.zundappveteranenclub.nl

www.zundappveteranenclub.nl

www.zundappveteranenclub.nl

www.zundappveteranenclub.nl